21-FEB-2008 15:03

F.A.P.	STATE PROJECT	PARISH	SHEET NO.

TYPE "A"

PAVED DRIVE ALONG AGGREGATE SHOULDER CONNECTING EXISTING AGGREGATE DRIVE

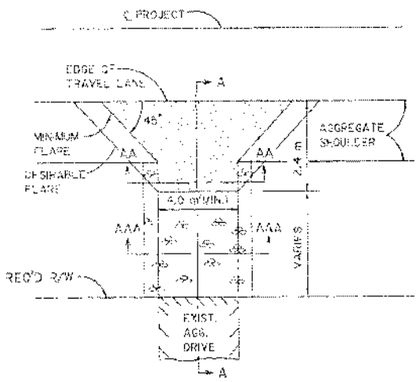

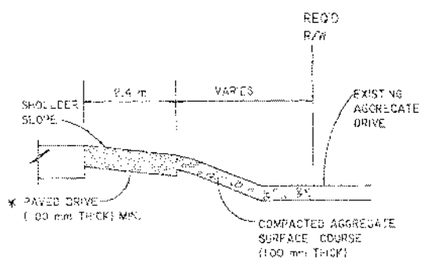

SECTION A-A

TYPE "B"

PAVED DRIVE ALONG AGGREGATE SHOULDER CONNECTING EXISTING PAVED DRIVE

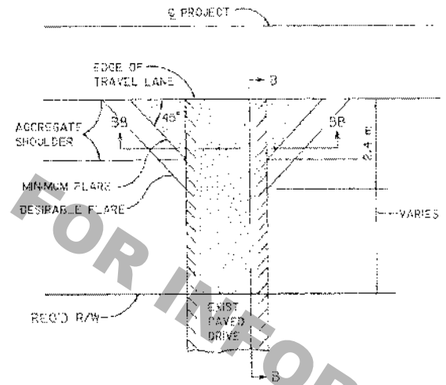

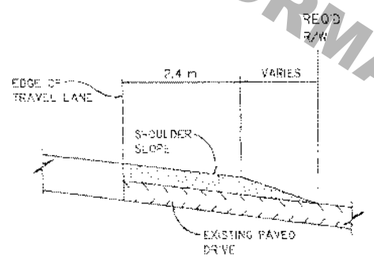

SECTION B-B

TYPE "C"

PAVED DRIVE ALONG PAVED SHOULDER CONNECTING EXISTING PAVED DRIVE

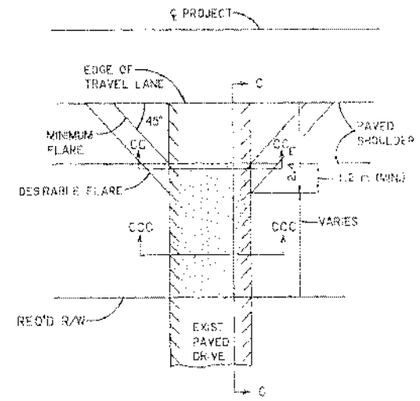

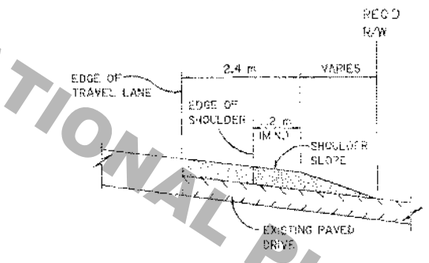

SECTION C-C

TYPE "D"

PAVED DRIVE ALONG PAVED SHOULDER CONNECTING EXISTING AGGREGATE DRIVE

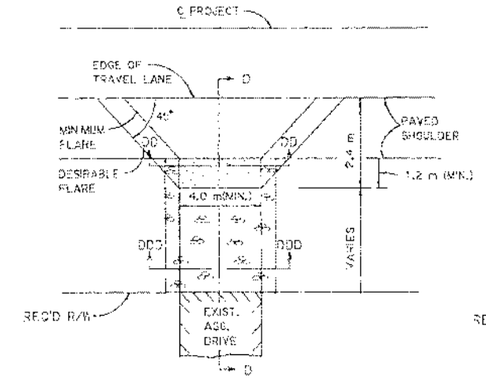

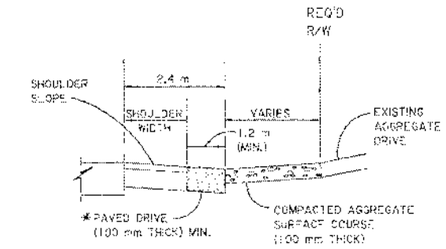

SECTION D-D

TYPE "E"

AGGREGATE SURFACE COURSE DRIVE

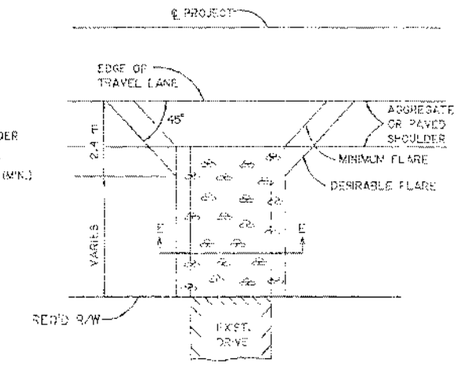

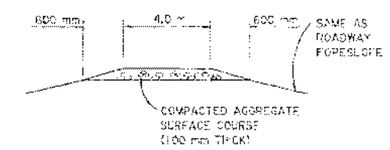

SECTION E-E

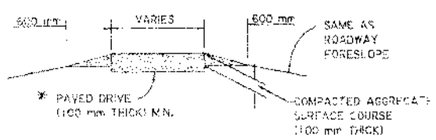

SECTION AA-AA

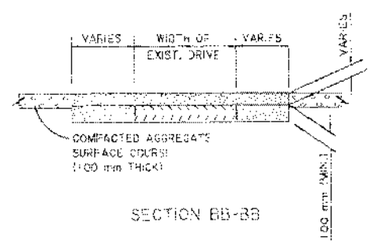

SECTION BB-BB

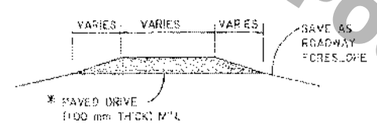

SECTION CC-CC

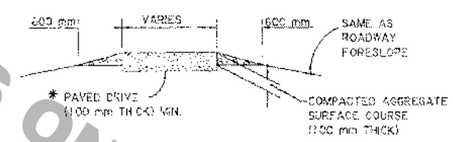

SECTION DD-DD

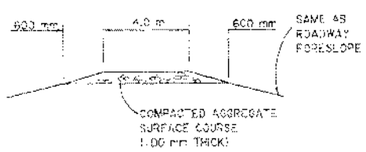

SECTION AAA-AAA

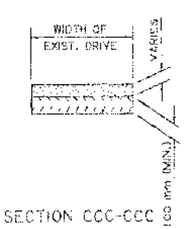

SECTION CCC-CCC

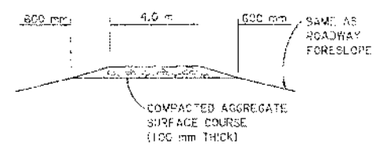

SECTION DDD-DDD

NOTES:

1. DRIVE WIDTHS AND FLARES MAY BE REDUCED TO LESS THAN MINIMUMS SHOWN, AS NECESSARY TO MEET EXISTING CONDITIONS. REDUCE DIMENSIONS AS REQUIRED TO AVOID EARTHWORK WHEN THE CONTRACT DOES NOT PROVIDE EARTHWORK ITEMS.

* ASPHALTIC CONCRETE FOR PAVED DRIVES SHALL BE ASPHALTIC CONCRETE WEARING COURSE (TYPE 3) OR AT THE OPTION OF THE CONTRACTOR, SHOULDER MIX MAY BE USED. ALSO, WHEN PAVED DRIVES ARE PLACED IN TWO LIFTS, BINDER COURSE MAY BE USED IN THE FIRST LIFT. COMPACTION OF SUBGRADE AND GRADING WORK FOR CONSTRUCTION OF THE PAVED DRIVES SHALL BE SATISFACTORY TO THE PROJECT ENGINEER AND SHALL BE AT NO DIRECT PAY. PAVEMENT THICKNESS MAY BE INCREASED AS DIRECTED BY THE PROJECT ENGINEER.

Δ AGGREGATE SURFACE COURSE IS TO BE USED FOR INFREQUENTLY USED DRIVES WHICH DO NOT CONNECT TO RESIDENCES OR COMMERCIAL ESTABLISHMENTS.

DATE	DESCRIPTION	BY	BY

REVISIONS

STANDARD PLAN NO. DD-01(M) | SHEET 1 OF 1

RURAL DRIVES FOR OVERLAY PROJECTS

DATE:

STATE OF LOUISIANA
DEPARTMENT OF TRANSPORTATION AND DEVELOPMENT

DESIGNED | CHECKED | APPROVED | DATE 2-4-97 | FILE DD-01(M)

CHIEF ENGINEER

FOR INFORMATIONAL PURPOSES ONLY

R:\Standard Plans\Metric\DD01M.dgn