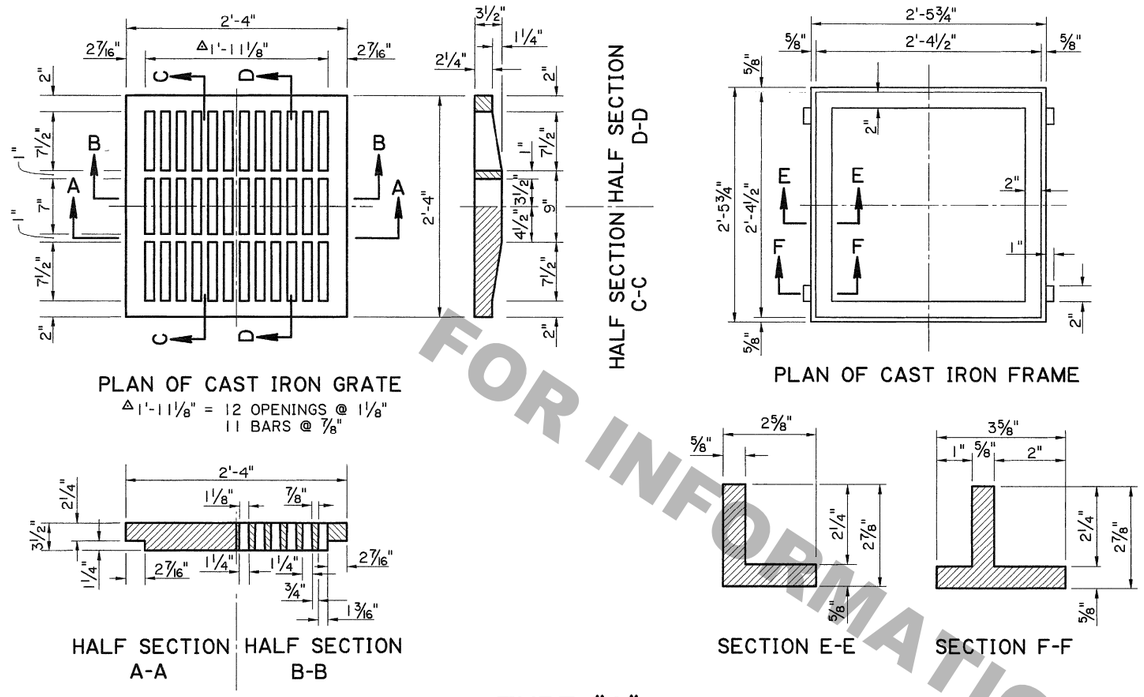

TYPE "A"

DETAILS OF CAST IRON GRATE & FRAME

NOTES: 1. WEIGHT OF CAST IRON GRATE = 334 LBS
2. WEIGHT OF CAST IRON FRAME = 90 LBS

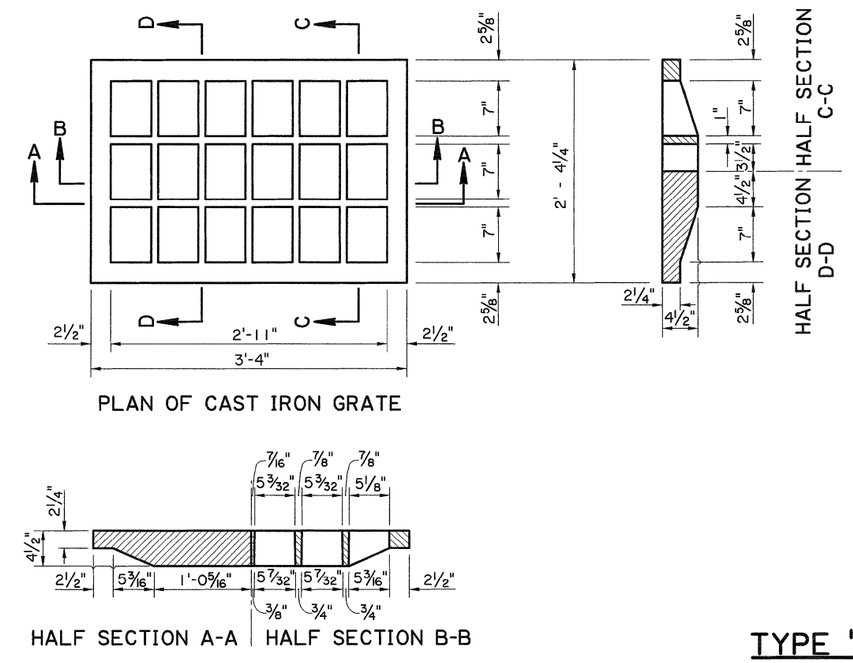

TYPE "B"

DETAILS OF CAST IRON GRATE

NOTES: 1. WEIGHT OF CAST IRON GRATE = 350 LBS
2. UNLESS OTHERWISE STATED, TYPE "E" FRAME WILL BE USED WITH THIS GRATE.

TYPE "C"

NOTES: 1. GRATES TO BE GALVANIZED AFTER FABRICATION.
2. UNLESS OTHERWISE STATED, TYPE "E1" FRAME IS TO BE USED WITH THESE GRATES. (SEE SHEET 2)
3. SUPPLIER OF GRATE ALSO IS TO FURNISH PRE-FITTED GRATE FRAME.

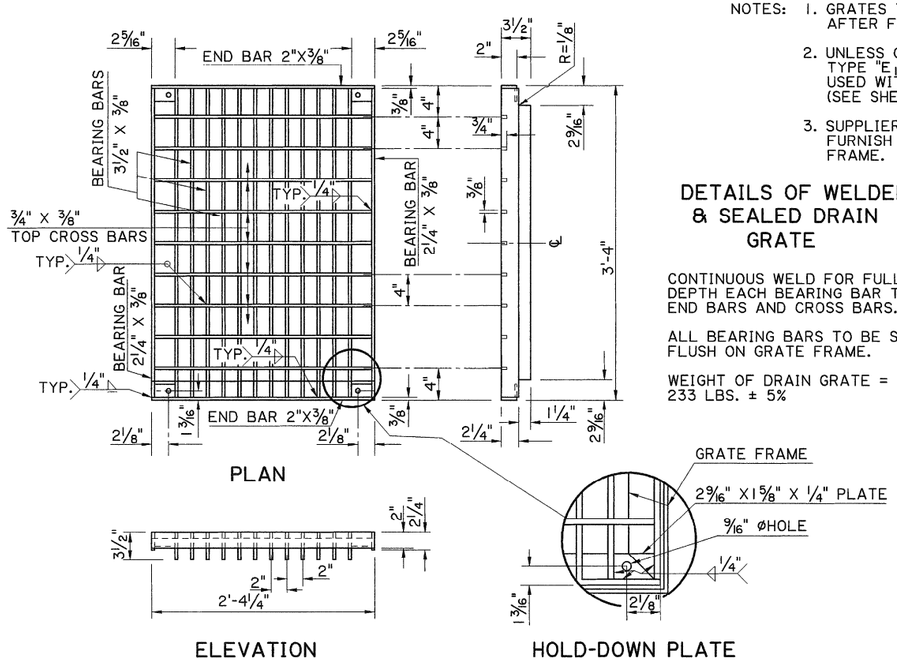

DETAILS OF WELDED & SEALED DRAIN GRATE

CONTINUOUS WELD FOR FULL DEPTH EACH BEARING BAR TO END BARS AND CROSS BARS.

ALL BEARING BARS TO BE SET FLUSH ON GRATE FRAME.

WEIGHT OF DRAIN GRATE = 233 LBS. ± 5%

DETAILS OF RIVETED RETICULINE DRAIN GRATE ALTERNATE

CONTINUOUS WELD FOR FULL DEPTH EACH BEARING BAR TO END BARS.

ALL BEARING BARS TO BE SET FLUSH ON GRATE FRAME.

CENTER TO CENTER OF BEARING BARS EQUAL 2 5/16" PLUS BEARING BAR THICKNESS.

WEIGHT OF DRAIN GRATE = 266 LBS. ± 5%

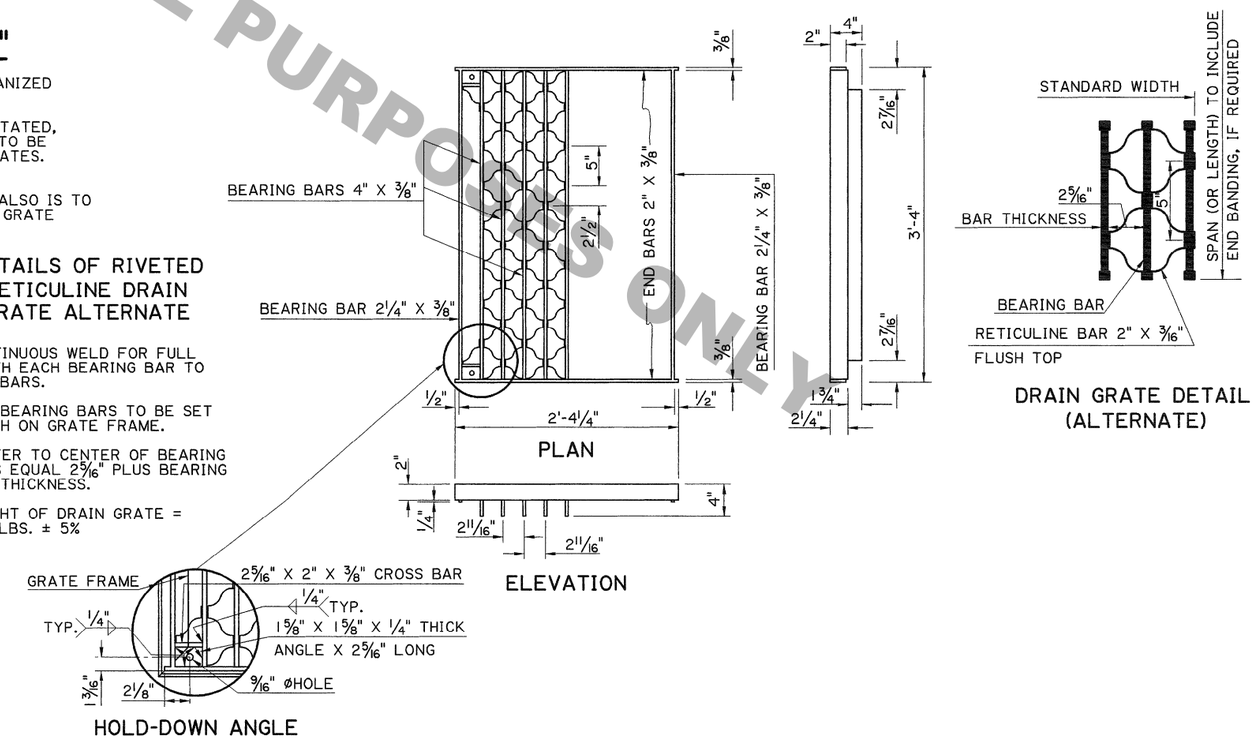

FOR INFORMATIONAL PURPOSES ONLY

SHEET NUMBER	PARISH	FEDERAL PROJECT	STATE PROJECT

DESIGNED	DETAILED	DATE	8-15-77
CHECKED	CHECKED	SHEET	1 OF 5

DATE	REVISION DESCRIPTION	BY
8-11-06	GENERAL REV. - ADD TYPE K1, REVISED TYPES C,E1,N	JDK
9-26-94	GENERAL REVISIONS - DELETE TYPES G,J,L,M,O	JCM

APPROVED BY CHIEF ENGINEER: Wm. H. Temple DATE 8-11-06

STATE OF LOUISIANA — DEPARTMENT OF TRANSPORTATION AND DEVELOPMENT

DETAILS OF GRATES, GRATE FRAMES AND COVERS FOR CATCH BASINS AND MANHOLES

STANDARD PLAN MC-01

HYDRAULICS SECTION

R:\Standard Plans\English\New sheets\MC-01(SHEET 1).dgn