28-NOV-2007 10:26

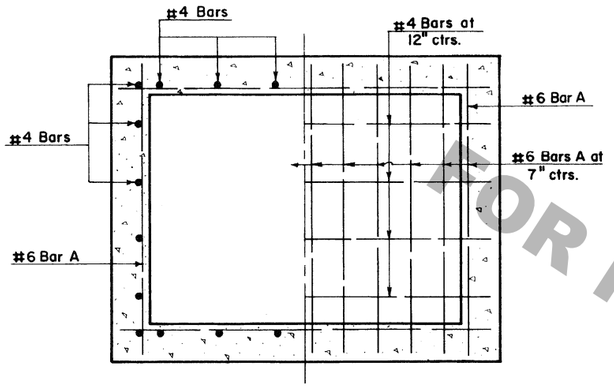


## SECTIONAL PLAN
(Showing bottom slab & walls)

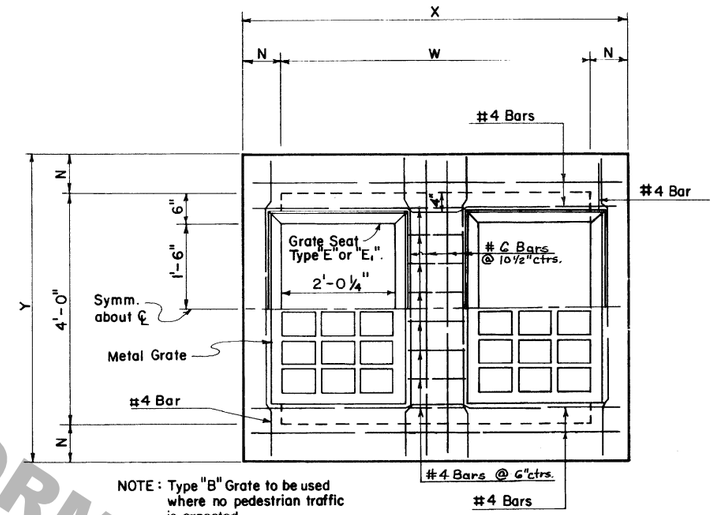


NOTE: Type "B" Grate to be used where no pedestrian traffic is expected.

Type "C" Grate to be used where pedestrian traffic is expected.

## PLAN
Grate to be type "B" or "C". Type "B" shown.

| DIMENSIONS | | | | | | | | | | |
|---|---|---|---|---|---|---|---|---|---|---|
| Trunk | Depth to 8 feet | | | | | Depth 8 ft. to 12 ft. | | | | |
| Pipe | N | T | W | X | Y | N | T | W | X | Y |
| Inches | Inch | Inch | Ft.- In. | Ft.- In. | Ft.- In. | Inch | Inch | Ft.- In. | Ft.- In. | Ft.- In. |
| 60 to 72 | 7 | 10 | 7-2 | 8-4 | 5-2 | 8 | 10 | 7-2 | 8-6 | 5-4 |

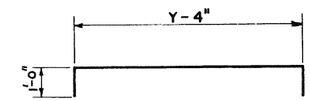


## # 6 BARS A
(4 1/2" Diam. Pin)

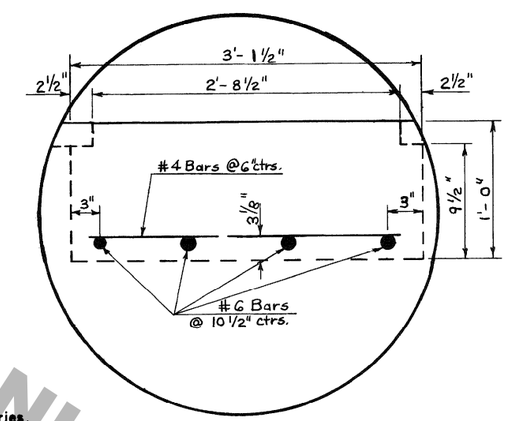


## INSET "A"

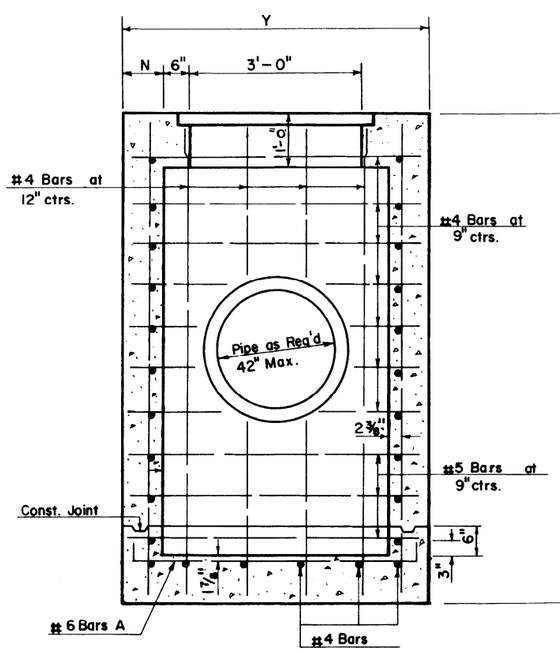


## SECTION A-A

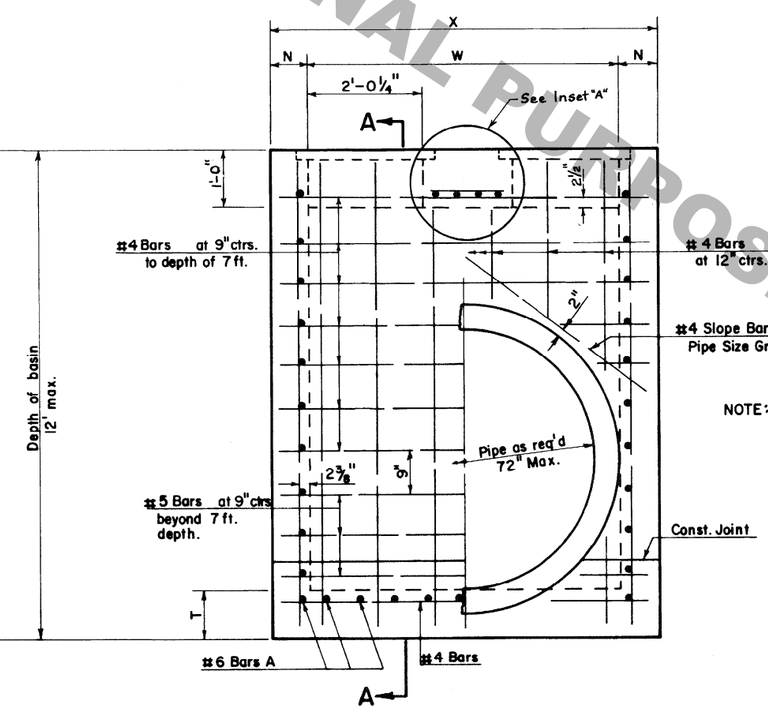


## ELEVATION

NOTE: Pipe size & location varies. Cut reinforced steel to clear, as required.

### GENERAL NOTES:

Dimensions relating to reinforced steel are to bar centers.

Vertical reinforced steel may be spliced. Splice length is 35 diameters.

For details of const. joint, see Std. Plan CM-49.

For details of grate and seat, see Std. Plan MC-01 (Type B or C).

See plans for type of grate to be used for each catch basin.

Section 702 of the current DOTD Standard Specifications shall apply.

STATE OF LOUISIANA
JACK C. MANNO
REG. No. 10494
REGISTERED PROFESSIONAL ENGINEER IN CIVIL ENGINEERING
Jack C. Manno
1-17-06

FOR INFORMATIONAL PURPOSES ONLY

| NO. | DATE | REVISION DESCRIPTION | BY |
|---|---|---|---|
| 2 | 1-17-06 | NEW SHEET, GENERAL REVISIONS | JCM |
| 1 | 3-23-98 | SCANNED ORIGINAL & ADDED NAME CB-2TOP02 | JCM |

DESIGNED GMD
CHECKED
DETAILED KAJ
CHECKED GMD
DATE 5-15-84
SHEET 1 OF 1

PARISH
FEDERAL PROJECT
STATE PROJECT
SHEET NUMBER

DOUBLE OPEN TOP CATCH BASIN
MAX. PIPE : 60" TO 72"
MAX. DEPTH : 12'

SPECIAL DETAIL CB-2TOP02

HYDRAULICS SECTION

R:\Standard Plans\Special Details\English\New Sheets\CB-2TOP02.dgn