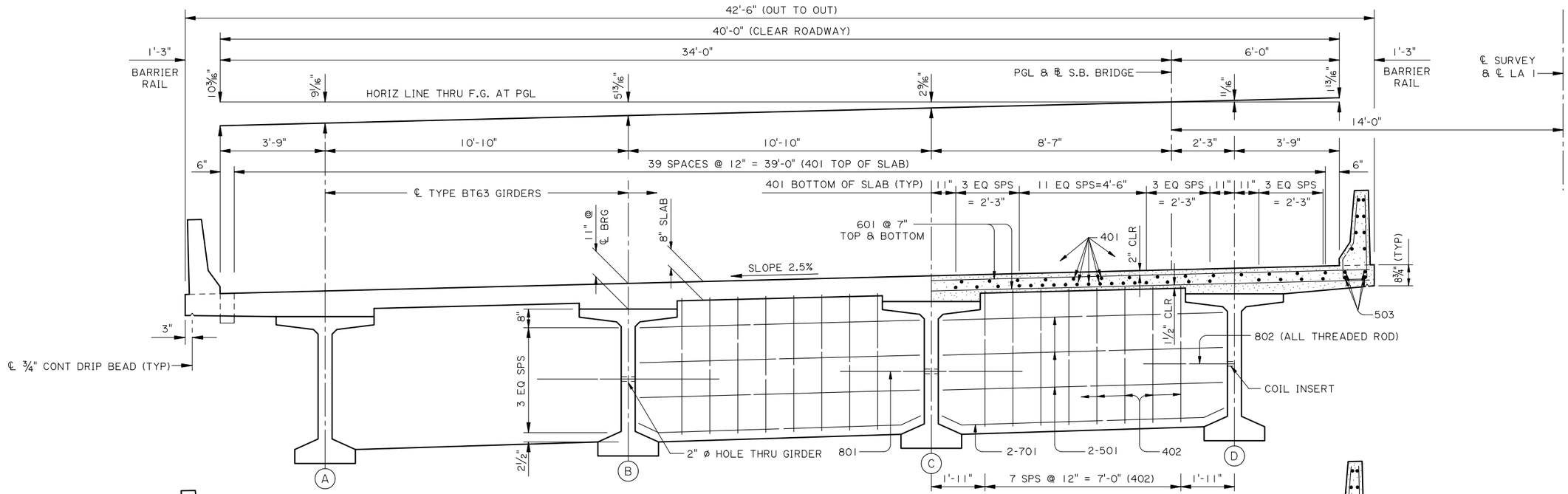

TYPICAL SECTION AT END DIAPH

(SCALE 1/2" = 1 FT)

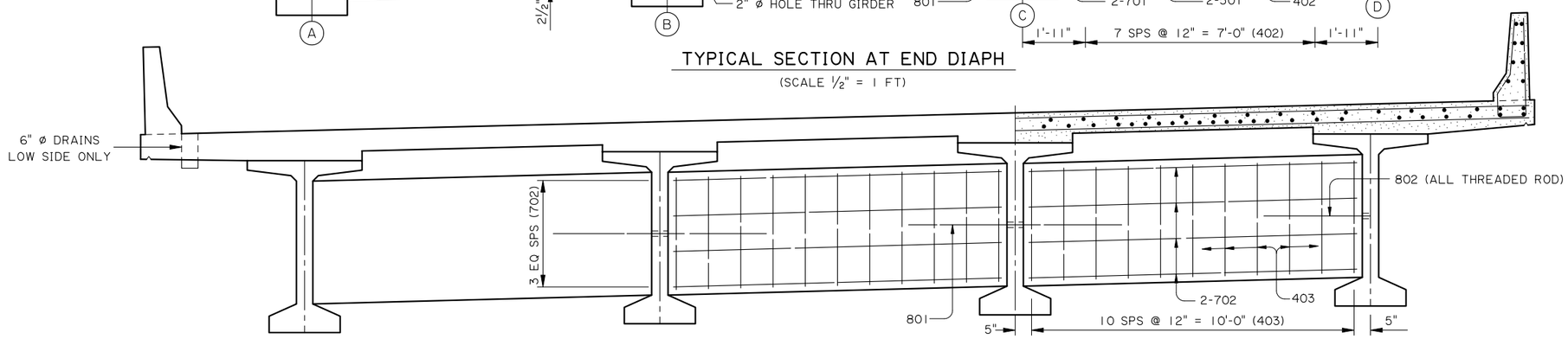

TYPICAL SECTION AT INTERM DIAPH

(SCALE 1/2" = 1 FT)

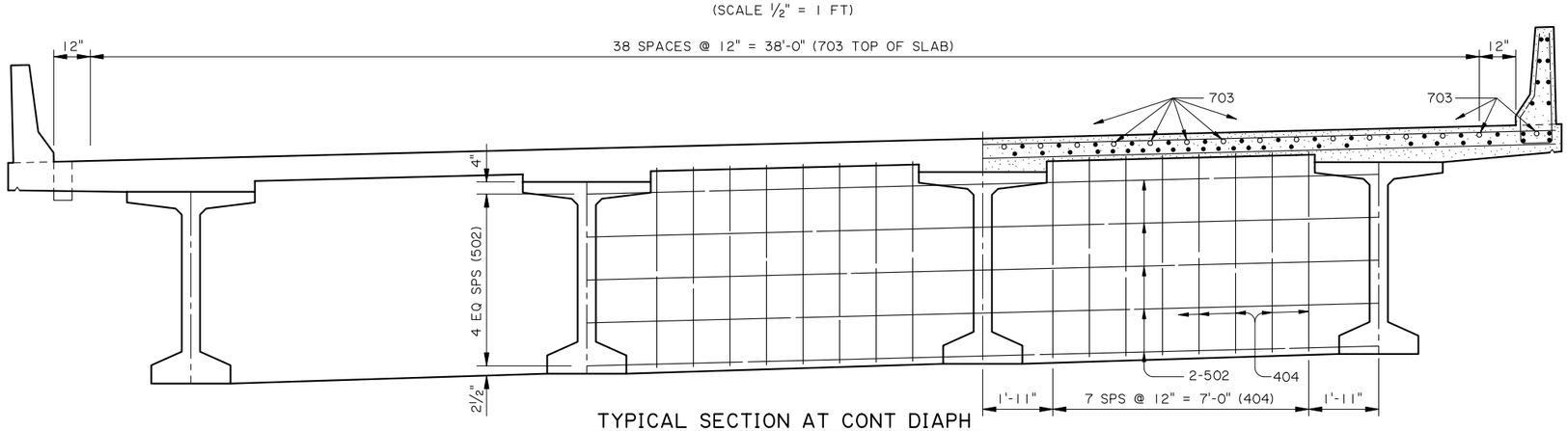

TYPICAL SECTION AT CONT DIAPH

(SCALE 1/2" = 1 FT)

SHEET NUMBER 196

PARISH: LAFOURCHE

FEDERAL PROJECT: 2904(500)

STATE PROJECT: 829-32-0001

DESIGNED G Otero
CHECKED M Paul
DETAILED L de Latour
CHECKED G Otero
DATE MAY 2005
SHEET 1 OF 2

PRE-FINAL PLANS

NO. | DATE | REVISION DESCRIPTION | BY

LA 1 RELOCATED FOURCHON TO LEEVILLE BRIDGE (PHASE 1A)

SPAN DETAILS - TYPE BT63 - ALT 3

The Wilbur Smith Partnership

Wilbur Smith Associates