Headwall Reinforcement

Clear Opening mm	Clear Opening mm	Size mm	No.	Spc. mm	Bars E° Length mm	Bars E1° Length mm	Bars O Length mm	#10 Bars O1 No.	#10 Bars O1 Length mm	#10 Bars T No.	#10 Bars T Length mm	#10 Bars T1 No.	#10 Bars T1 Length mm	#10 Bars T2 No.	#10 Bars T2 Length mm	#15 Bars P No.	#15 Bars P Length mm	#15 Bars P Spc. mm	#15 Bars P1 No.	#15 Bars P1 Length mm	#15 Bars P1 Spc. mm	#15 Bars J No.	#15 Bars J Length mm	#15 Bars J Spc. mm	#15 Bars J1 No.	#15 Bars J1 Length mm	#15 Bars J1 Spc. mm	#15 Bars M No.	#15 Bars M Length mm	#10 Bars N No.	#10 Bars N Length mm	#20 Bars X▽ No.	#20 Bars X▽ Length mm
2100	2100	20	34	310	1995	2440	2560	8	440	8	4270	8	690	4	3040	16	4270	285	16	690	285	20	4270	295	20	690	295	4	4020	8	770	36	600
2400	2400	20	44	270	2150	2770	2965	9	455	8	4930	8	690	4	3340	18	4930	295	18	690	295	22	4930	300	22	690	300	4	4320	9	770	40	600
2700	2700	25	44	300	2555	3100	3335	10	425	8	5570	8	690	4	3680	20	5570	300	20	690	300	24	5570	300	24	690	300	4	4660	10	770	44	600
3000	3000	25	54	265	2665	3420	3645	11	405	8	6190	8	690	4	4020	22	6190	300	22	690	300	26	6190	305	26	690	305	4	5000	11	770	48	600

° Includes 1- 990 mm lap splice for #20 and 1- 1280 mm lap splice for #25

▽Bars to be smooth and greased for 300 mm of length

Barrel Reinforcement

Clear Opening mm	Clear Opening mm	Spacing mm	#20 Bars A No.	#20 Bars A Length mm	#15 Bars B No.	#15 Bars B Length mm	#20 Bars D No.	#20 Bars D Length mm	#15 Bars G No.	#15 Bars G Length mm	#15 Bars H No.	#15 Bars H Length mm	Bars K Size	Bars K No.	Bars K Length mm	#15 Bars C◇ No.	#15 Bars C◇ Length mm
2100	2100	310	45	2440	45	2440	45	4720	45	4910	90	2140	15	90	2710	36	14 310
2400	2400	300	46	2740	46	2740	46	5020	46	5270	92	2470	15	92	3010	38	14 310
2700	2700	270	51	3080	51	3080	51	5320	51	5670	102	2800	20	102	3490	44	14 310
3000	3000	240	57	3420	57	3420	57	5620	57	6050	114	3120	20	114	3790	50	14 310

◇Includes 1 - 810 mm lap splice

Dimensions

Clear Opening mm	Clear Opening mm	Barrel T mm	Barrel N mm	Headwall E mm	B mm	J mm	F mm	G mm	H mm	L mm	P mm	M mm
2100	2100	290	220	550	200	1450	260	2200	2690	5380	5160	12 860
2400	2400	320	220	600	260	1700	305	2560	3020	6040	5820	14 480
2700	2700	350	240	720	260	1950	305	2930	3350	6700	6460	16 100
3000	3000	370	260	830	260	2150	305	3240	3670	7340	7080	17 680

Quantities

Clear Opening mm	Clear Opening mm	Per 0.5m of Barrel Steel kg	Per 0.5m of Barrel Concrete m3	13.0m Culvert ✱ Steel kg	13.0m Culvert ✱ Concrete m3	Headwall✱✱ Steel kg	Headwall✱✱ Concrete m3
2100	2100	101.92	1.20	4702	59.73	1026	14.28
2400	2400	112.66	1.44	5681	79.88	1376	21.26
2700	2700	146.50	1.76	8258	98.29	2225	26.25
3000	3000	175.01	2.08	10 252	116.90	2851	31.38

✱ Quantity Includes 2 Headwalls
✱✱ Quantity for 1 Headwall

GENERAL NOTES

DESIGN: Method - Headwalls are designed as retaining walls according to current AASHTO working stress procedures.

MATERIALS: Concrete - All concrete shall be Class A. All exposed edges shall be 20 mm chamfered. Reinforcing Steel - Reinforcement shall be Grade 400. Bar spacing dimensions are to bar centers. Steel required for lap splices not detailed shall not be measured for payment. Reinforcing steel shall have 50 mm cover unless otherwise specified.

A 450mm square of geotextile fabric (see section 1019 of the LA DOTD Standard Specifications) shall be placed in contact with the concrete behind each weephole in addition to approx. 0.05 m^3 of concrete sand (see Section 1003.02 of the LA DOTD Standard Specifications). A 450mm wide geotextile fabric will also be placed in contact with the concrete along each contraction joint.

JOINTS: For details of all joints see Standard Plan CM-49M.

CONSTRUCTION: The headwall parapet and toe should be constructed monolithically with the barrel on cast-in-place RCB.

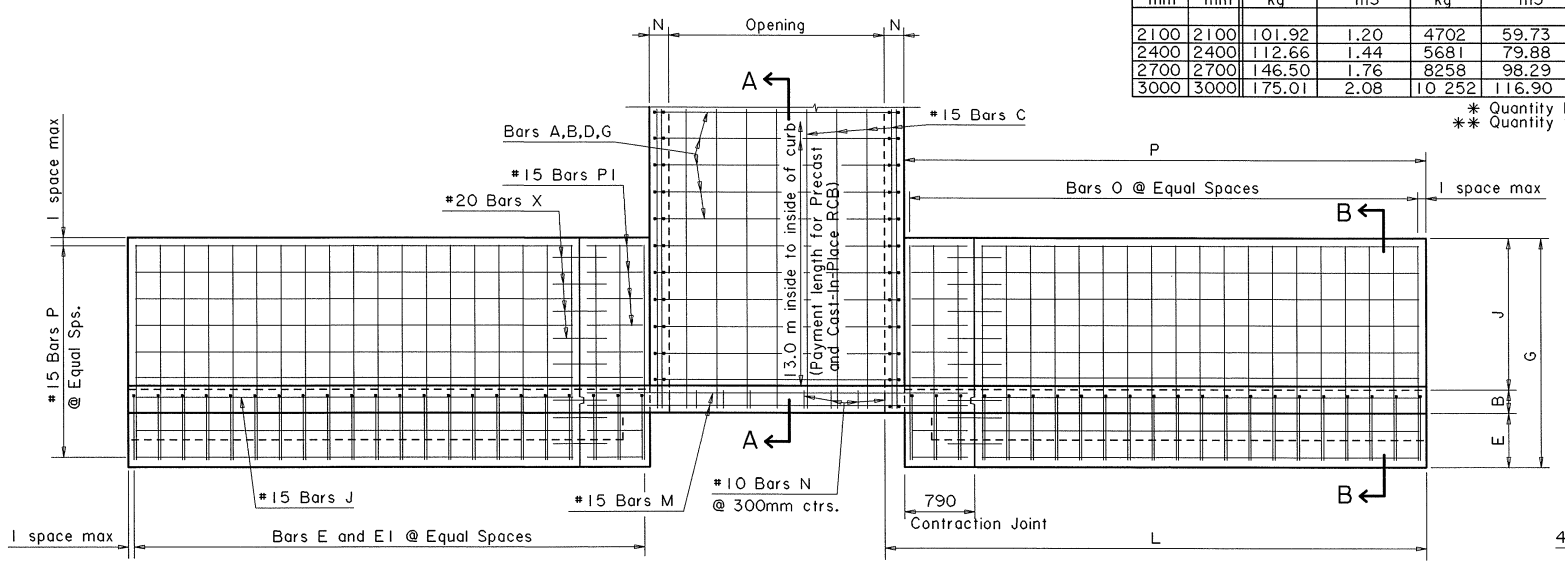

PLAN

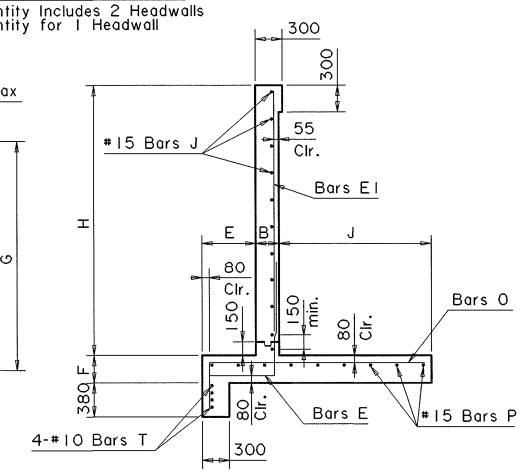

SECTION B-B

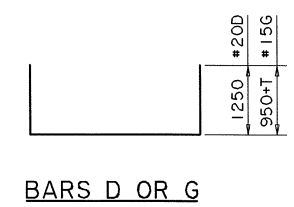

BARS D OR G

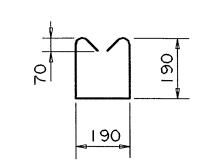

BARS N
45mm Pin
135 deg. Hook

810-T	#15K
990-T	#20K
210+F	Bars O
195	Bars O1
1100+F	#20E
1390+F	#25E

BARS K,O,O1,E

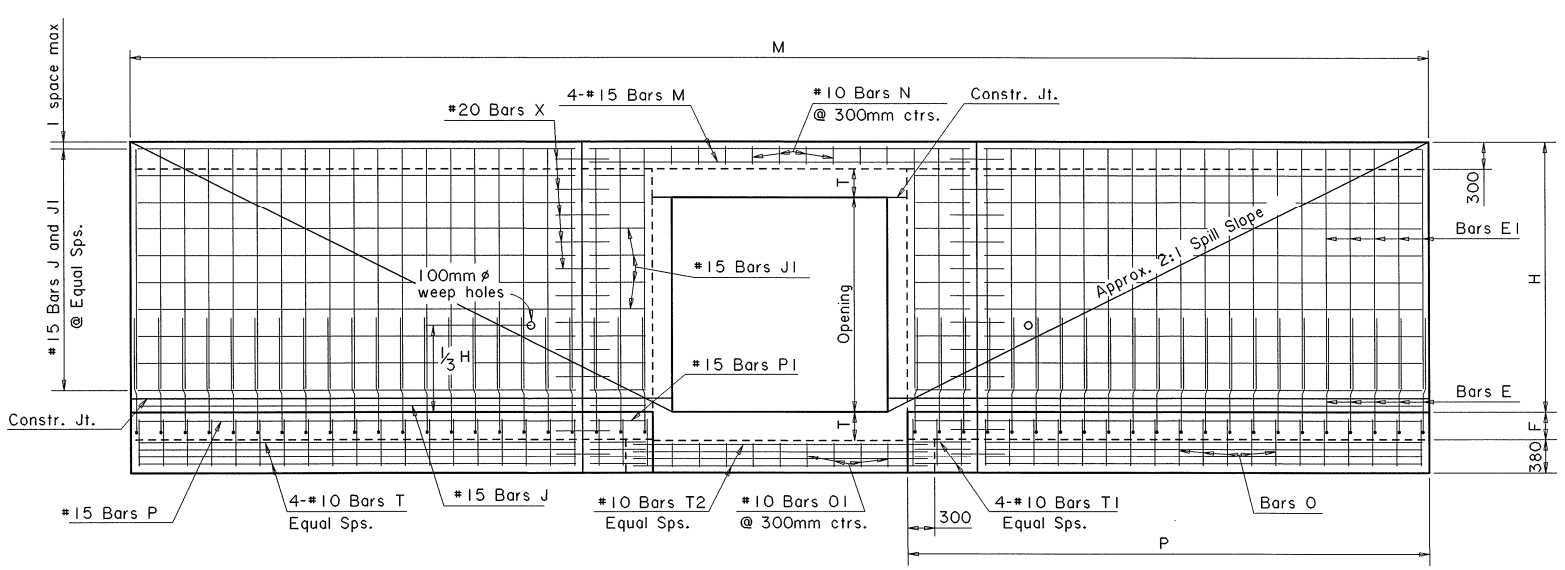

END ELEVATION

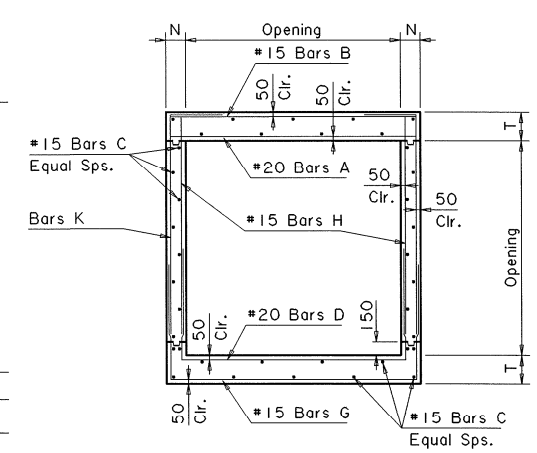

SECTION THRU BARREL

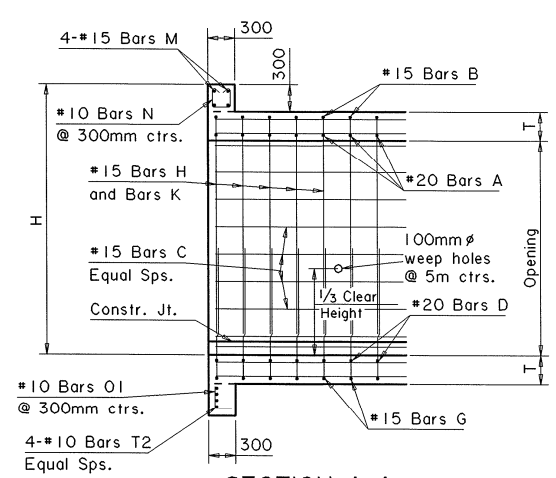

SECTION A-A

All dimensions are in millimeters (mm) unless otherwise noted.

R:\Gang029\dgn\metric\stdplans\RCB\rcb-90s2m.dgn

SHEET NUMBER

PARISH | FEDERAL PROJECT | STATE PROJECT

STATE OF LOUISIANA DEPARTMENT OF TRANSPORTATION AND DEVELOPMENT

REINFORCED CONCRETE BOX CULVERTS
2100, 2400, 2700 & 3000 mm
SINGLE BARREL - 90 DEGREE

STANDARD PLAN RCB-90S2M

HYDRAULICS SECTION

DESIGNED BADEAUX ENG. INC.
CHECKED
DETAILED T. BAKER SMITH
CHECKED
DATE 11-19-98
SHEET 1 OF 1

APPROVED
BY
DATE: 11-19-98
REVISION DESCRIPTION

APPROVED BY CHIEF ENGINEER Original Signed By: Chief Engineer
DATE