Headwall Reinforcement (Per Headwall)

Clear Opening mm	Clear Opening mm	Size mm	No.	Spc. mm	Bars E Length mm	Bars E1 Length mm	Bars O Length mm	#10 Bars O1 No.	#10 Bars O1 Length mm	#10 Bars T No.	#10 Bars T Length mm	#10 Bars T1 No.	#10 Bars T1 Length mm	#10 Bars T2 No.	#10 Bars T2 Length mm	#15 Bars P No.	#15 Bars P Length mm	#15 Bars P Spc. mm	#15 Bars P1 No.	#15 Bars P1 Length mm	#15 Bars P1 Spc. mm	#10 Bars J No.	#10 Bars J Length mm	#10 Bars J Spc. mm	#10 Bars J1 No.	#10 Bars J1 Length mm	#10 Bars J1 Spc. mm	#15 Bars M No.	#15 Bars M Length mm	#10 Bars N No.	#10 Bars N Length mm	#20 Bars X* No.	#20 Bars X* Length mm
900	900	15	18	310	1555	1190	1750	5	490	8	1790	8	690	4	1800	10	1790	300	10	690	300	12	1790	280	10	690	280	4	2780	5	770	22	600
1200	1200	15	22	310	1605	1500	1950	6	480	8	2410	8	690	4	2100	12	2410	280	12	690	280	14	2410	290	12	690	290	4	3080	6	770	26	600
1500	1500	15	26	310	1675	1810	2170	7	470	8	3030	8	690	4	2400	14	3030	270	14	690	270	18	3030	250	16	690	250	4	3380	7	770	30	600
1800	1800	15	34	270	1725	2110	2320	8	470	8	3630	8	690	4	2700	16	3630	260	16	690	260	20	3630	255	18	690	255	4	3680	8	770	36	600

*Bars to be smooth and greased for 300 mm of length

Barrel Reinforcement

Clear Opening mm	Clear Opening mm	Spacing mm	Bars A Size mm	Bars A No.	Bars A Length mm	#15 Bars B No.	#15 Bars B Length mm	Bars D Size mm	Bars D No.	Bars D Length mm	#15 Bars G No.	#15 Bars G Length mm	#15 Bars H No.	#15 Bars H Length mm	#15 Bars K No.	#15 Bars K Length mm	#10 Bars C* No.	#10 Bars C* Length mm
900	900	300	15	46	1200	-	-	15	46	3315	46	3570	-	-	92	1885	26	14 070
1200	1200	300	15	46	1500	-	-	15	46	4235	46	3890	-	-	92	2345	28	14 070
1500	1500	300	20	46	1800	46	1800	20	46	4120	46	4210	92	1510	92	2315	28	14 070
1800	1800	300	20	46	2100	46	2100	20	46	4420	46	4510	92	1810	92	2615	36	14 070

*Includes 1 - 570 mm lap splice

Dimensions

Clear Opening mm	Clear Opening mm	Barrel T mm	Barrel N mm	Headwall E mm	B mm	J mm	F mm	G mm	H mm	L mm	P mm	M mm
900	900	240	200	300	180	900	260	1380	1440	2880	2680	6660
1200	1200	250	200	350	180	1050	260	1580	1750	3500	3300	8200
1500	1500	260	200	400	200	1200	260	1800	2060	4120	3920	9740
1800	1800	260	200	450	200	1300	260	1950	2360	4720	4520	11 240

Quantities

Clear Opening mm	Clear Opening mm	Per 0.5m of Barrel Steel Kg	Per 0.5m of Barrel Concrete m3	13.0m Culvert* Steel Kg	13.0m Culvert* Concrete m3	Headwall** Steel Kg	Headwall** Concrete m3
900	900	42.03	0.49	1669	22.30	288	4.75
1200	1200	49.38	0.64	2051	29.79	384	6.58
1500	1500	71.22	0.79	2874	38.61	511	8.98
1800	1800	81.63	0.93	3463	46.76	670	11.26

* Quantity Includes 2 Headwalls
** Quantity for 1 Headwall

GENERAL NOTES

DESIGN: Method - Headwalls are designed as retaining walls according to current AASHTO working stress procedures.

MATERIALS: Concrete - All concrete shall be Class A. All exposed edges shall be 20 mm chamfered. Reinforcing Steel - Reinforcement shall be Grade 400. Bar spacing dimensions are to bar centers. Steel required for lap splices not detailed shall not be measured for payment. Reinforcing steel shall have 50 mm cover unless otherwise specified.

A 450mm square of geotextile fabric (see section 1019 of the LA DOTD Standard Specifications) shall be placed in contact with the concrete behind each weephole in addition to approx. 0.05 m^3 of concrete sand (see Section 1003.02 of the LA DOTD Standard Specifications). A 450mm wide geotextile fabric will also be placed in contact with the concrete along each contraction joint.

JOINTS: For details of all joints see Standard Plan CM-49M.

CONSTRUCTION. The headwall parapet and toe should be constructed monolithically with the barrel on cast-in-place RCB.

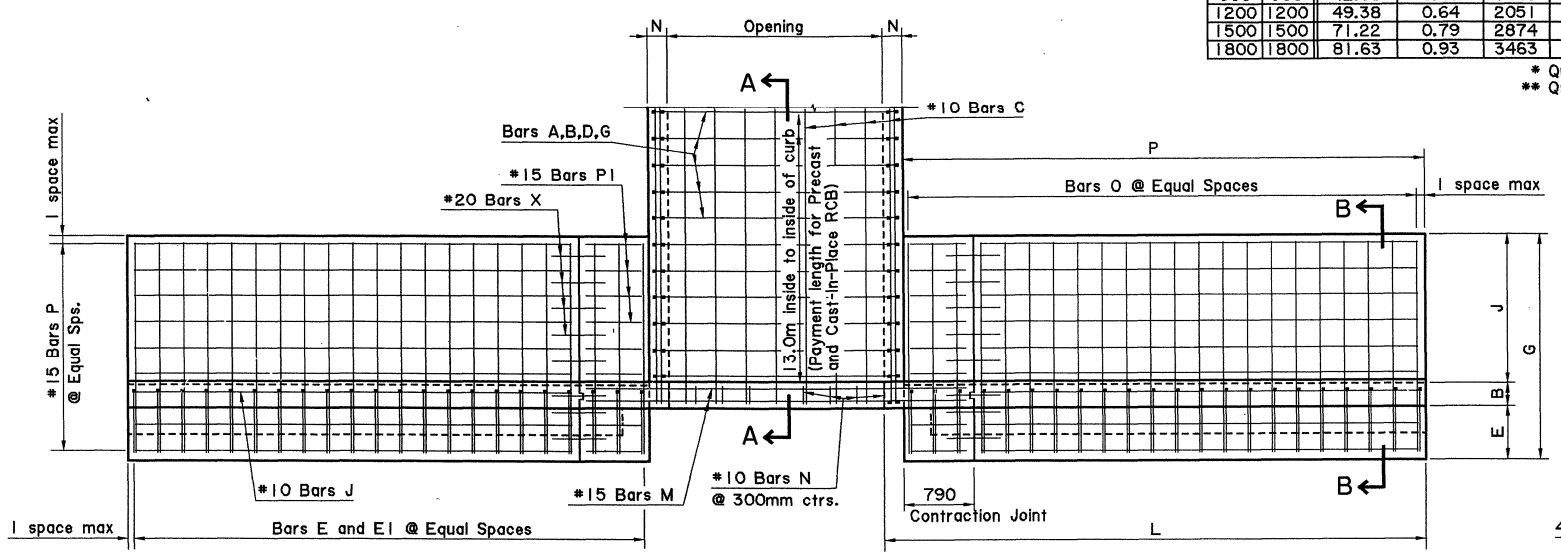

PLAN

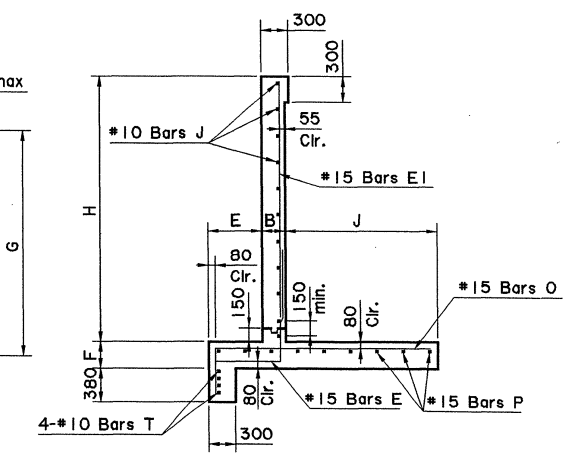

SECTION B-B

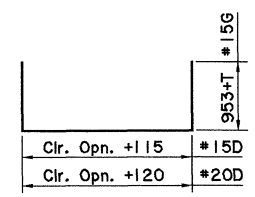

BARS D OR G

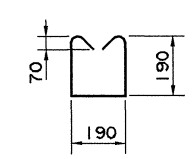

BARS N
45mm Pin
135 deg. Hook

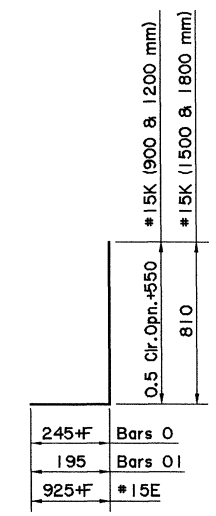

BARS K,O,O1,E

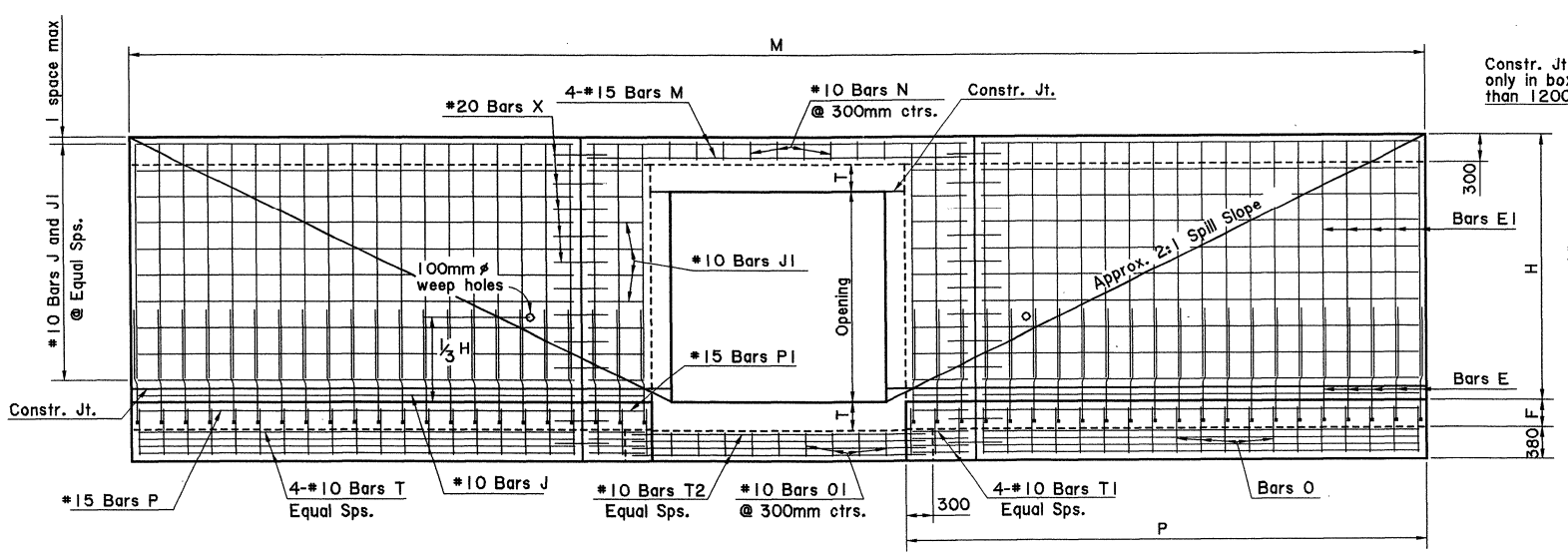

END ELEVATION

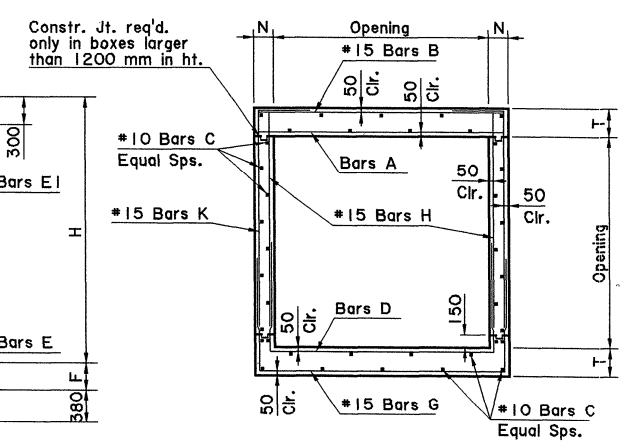

SECTION THRU BARREL

Bars B and H not needed for 900 and 1200 RCB's.

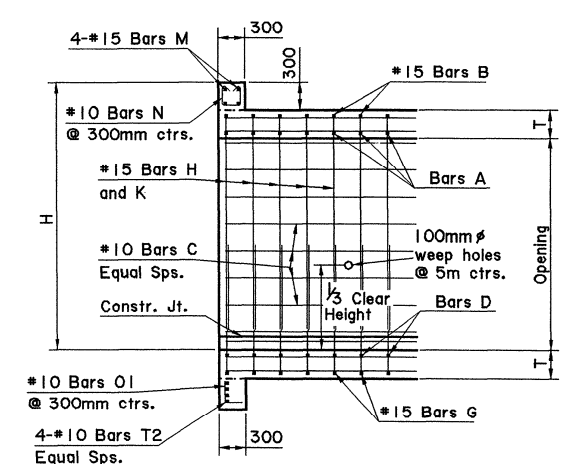

SECTION A-A

All dimensions are in millimeters (mm) unless otherwise noted.

SHEET NUMBER

PARISH | FEDERAL PROJECT | STATE PROJECT

REINFORCED CONCRETE BOX CULVERTS
900, 1200, 1500 & 1800 mm
SINGLE BARREL - 90 DEGREE

STANDARD PLAN RCB-90S1M

HYDRAULICS SECTION

DESIGNED BADEAUX ENG. INC.
CHECKED
DETAILED T. BAKER SMITH
CHECKED
DATE
SHEET 1 OF 1

REVISION DESCRIPTION | BY | APPROVED | DATE

APPROVED BY CHIEF ENGINEER Original Signed by Chief Engineer | DATE

11-MAY-1999 16:09

r:\dgn\metric\stdplans\rcb\rcb-90s1m.dgn