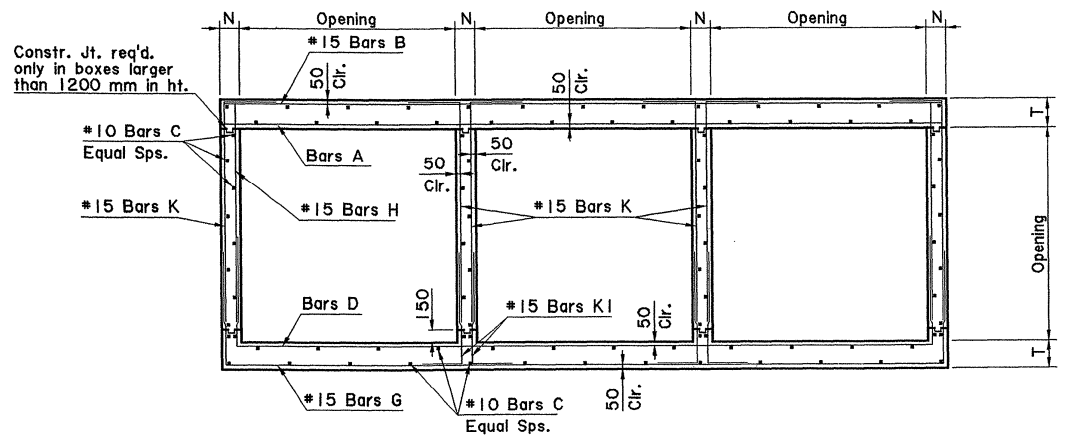

SECTION THRU BARREL

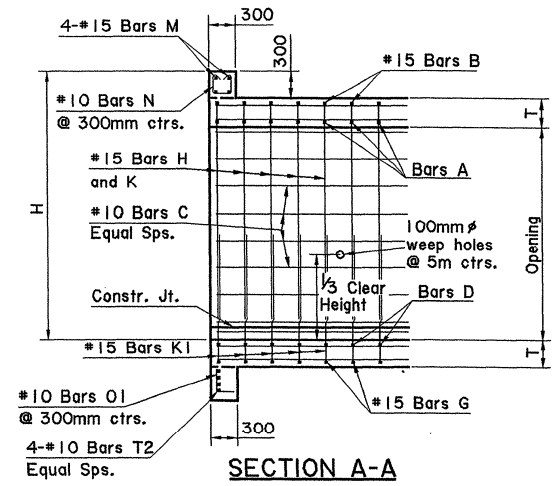

SECTION A-A

GENERAL NOTES

DESIGN: Method - Headwalls are designed as retaining walls according to current AASHTO working stress procedures.

MATERIALS: Concrete - All concrete shall be Class A. All exposed edges shall be 20 mm chamfered. Reinforcing Steel - Reinforcement shall be Grade 400. Bar spacing dimensions are to bar centers. Steel required for lap splices not detailed shall not be measured for payment. Reinforcing steel shall have 50 mm cover unless otherwise specified.

A 450mm square of geotextile fabric (see section 1019 of the LA DOTD Standard Specifications) shall be placed in contact with the concrete behind each weephole in addition to approx. 0.05 m^3 of concrete sand (see Section 1003.02 of the LA DOTD Standard Specifications). A 450mm wide geotextile fabric will also be placed in contact with the concrete along each contraction joint.

JOINTS: For details of all joints see Standard Plan CM-49M.

CONSTRUCTION. The headwall parapet and toe should be constructed monolithically with the barrel on cast-in-place RCB.

Bars H not needed for 900 and 1200 RCB's.

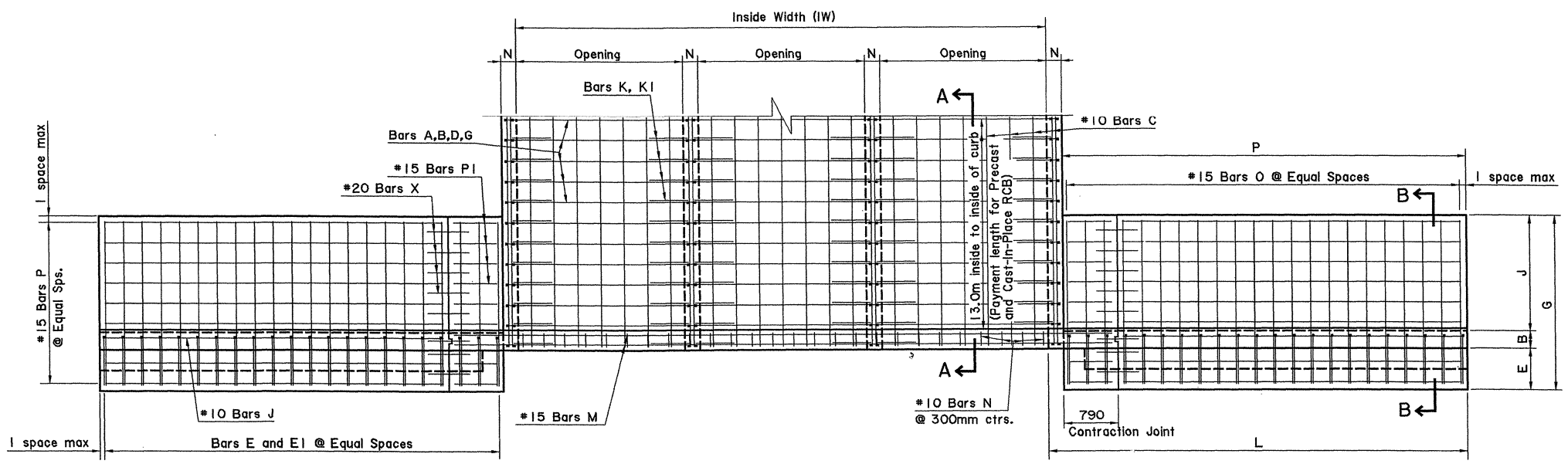

PLAN

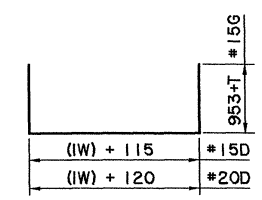

BARS D OR G

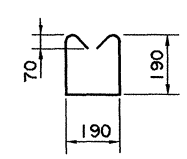

BARS N
45mm Pin
135 deg. Hook

810	#15K and #15K1
245+F	Bars O
195	Bars O1
925+F	#15E

BARS K,K1,O,O1,E

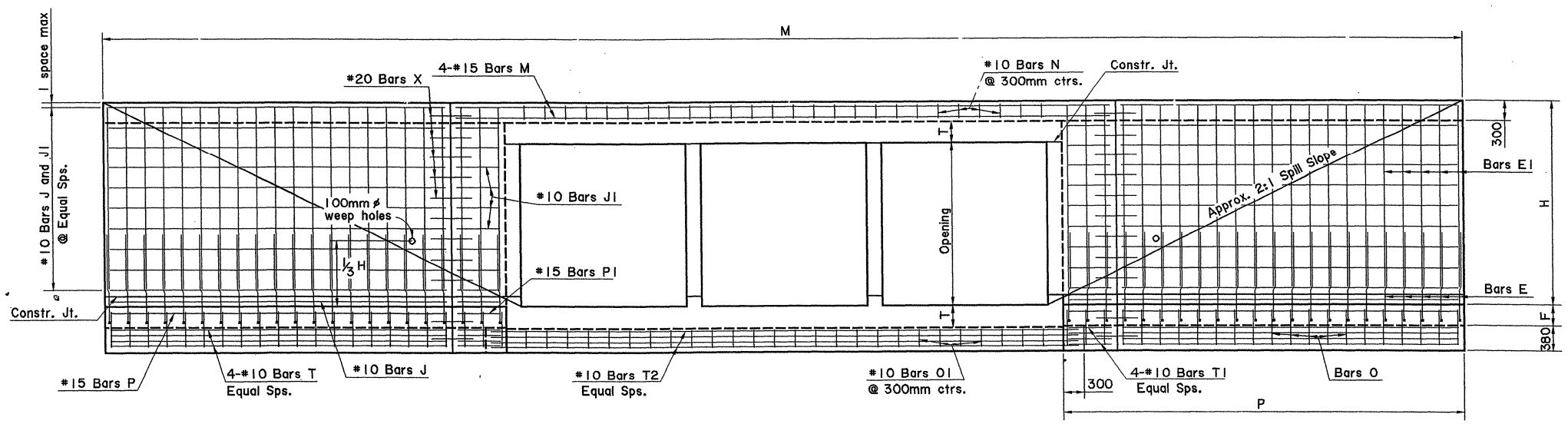

END ELEVATION

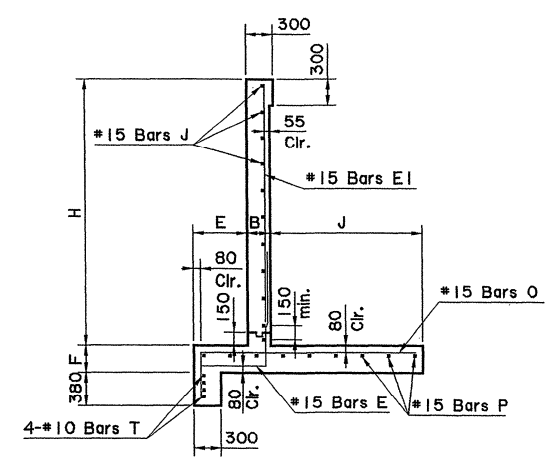

SECTION B-B

All dimensions are in millimeters (mm) unless otherwise noted.

SHEET NUMBER

PARISH | FEDERAL PROJECT | STATE PROJECT

REINFORCED CONCRETE BOX CULVERTS
900, 1200, 1500 & 1800 mm
MULTIPLE BARRELS - 90 DEGREE

STANDARD PLAN NO. RCB-90M1M

HYDRAULICS SECTION

DESIGNED BADEAUX ENG. INC.
CHECKED
DETAILED T. BAKER SMITH
CHECKED
DATE
SHEET 1 OF 2

APPROVED
BY
DATE: 5-24-99

REVISION DESCRIPTION

APPROVED BY CHIEF ENGINEER
Original Signed by Chief Engineer

r:\dgn\metric\stdplans\rcb\rcb-90m1m.dgn
11-MAY-1999 14:51