	STATE PROJECT	PARISH	SHEET NO.

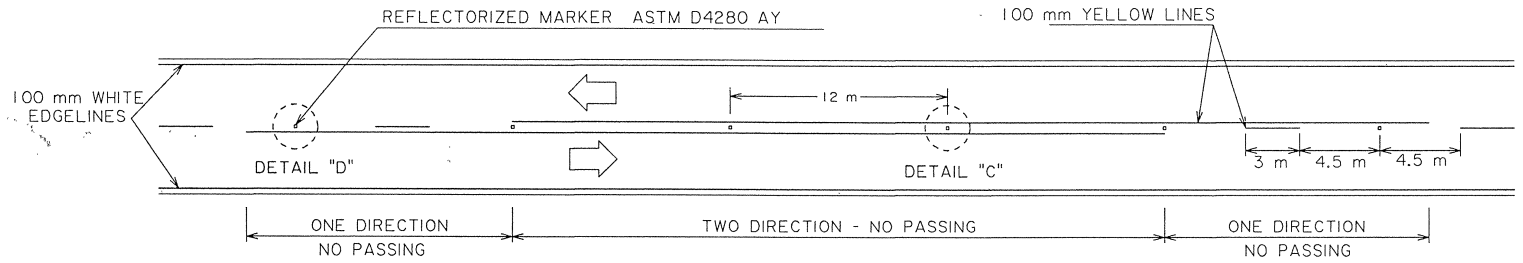

TYPICAL TWO LANE, TWO WAY ROADWAY

d = Advance Warning Distance
(See MUTCD Sec. 2C-3)

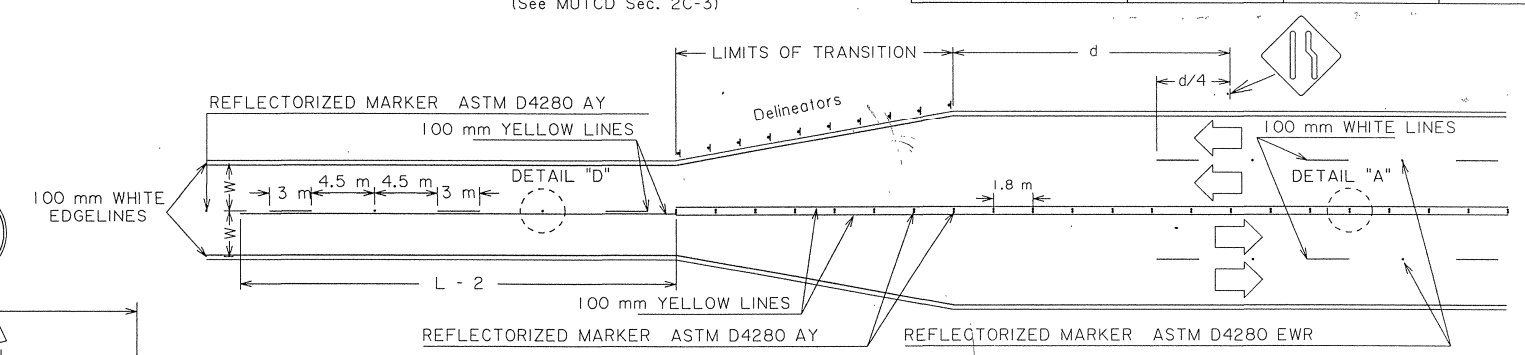

TYPICAL TWO LANE TO FOUR LANE UNDIVIDED HIGHWAY

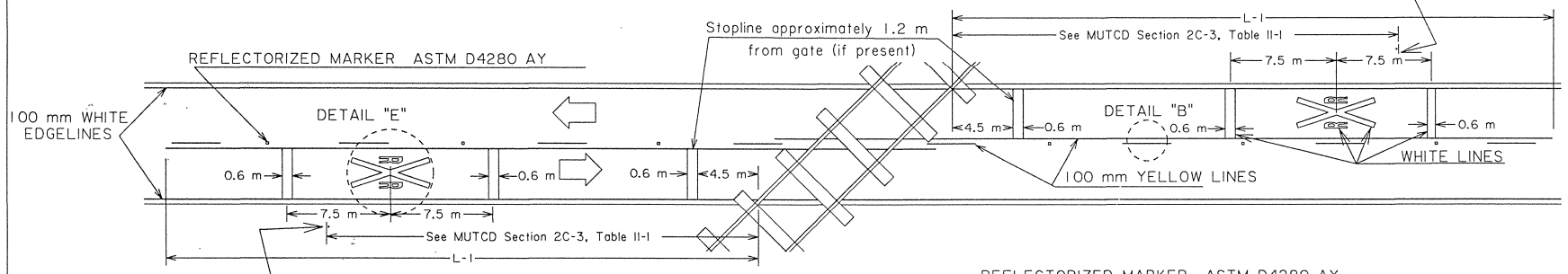

TYPICAL RAILROAD GRADE CROSSING

A portion of the pavement symbol should be directly opposite the Advance Warning Sign (W10-1)

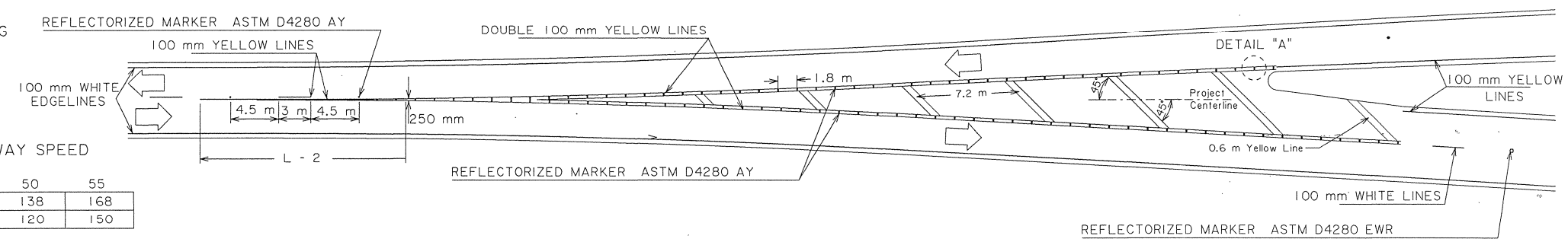

TYPICAL TWO LANE TO FOUR LANE DIVIDED HIGHWAY

"L" DISTANCE (m) OF NO PASSING ZONES FOR GIVEN HIGHWAY SPEED

HIGHWAY SPEED (MPH)	25	30	35	40	45	50	55
L - 1 (RAILROAD GRADE CROSSING)	86	95	100	108	123	138	168
L - 2 (OBSTRUCTION)	68	75	83	90	105	120	150

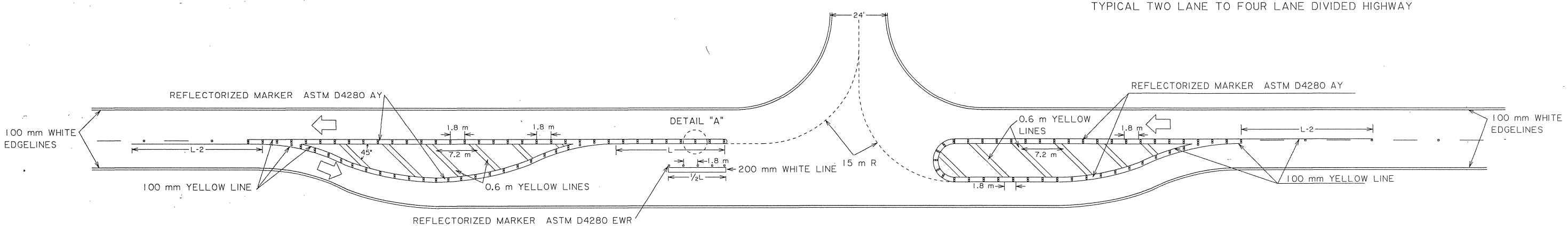

LEFT TURN LANE AT "T" INTERSECTION ON TWO LANE, TWO WAY ROADWAY

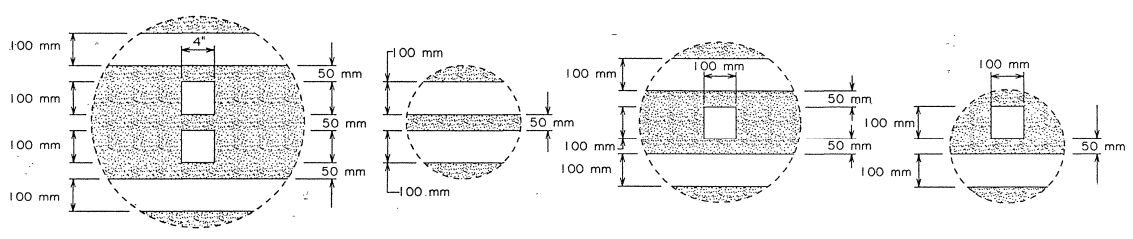

DETAIL "A" DETAIL "B" DETAIL "C" DETAIL "D"

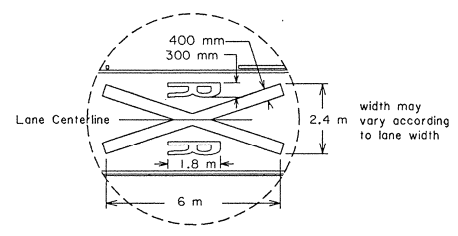

DETAIL "E"

EDGELINE ARE TO BE USED ON ALL PAVEMENTS 6.6 m OR MORE IN WIDTH.

DATE	DESCRIPTION	BY	APPROVED

REVISIONS

STANDARD PLAN NO. PM-01-M — 4 OF 4

METRIC DETAILS OF RAISED TRAFFIC MARKERS and PAVEMENT MARKINGS

DATED 1-2-92

STATE OF LOUISIANA
DEPARTMENT OF TRANSPORTATION AND DEVELOPMENT

DESIGNED A Caceres — DETAILED T Swanson
CHECKED D Besty — CHECKED P Allain

APPROVED Original Signed by Chief Engineer DATE
CHIEF ENGINEER