	STATE PROJECT	PARISH	SHEET NO.

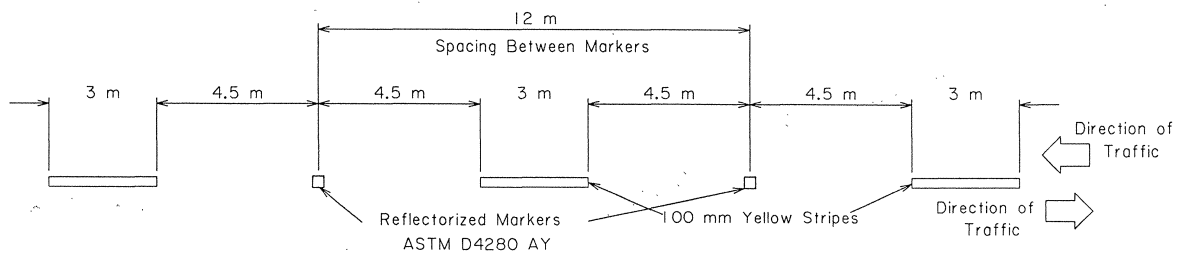

LAYOUT A

To Be Used Along ℄ of Two - Lane Roadway with Two - Way Traffic

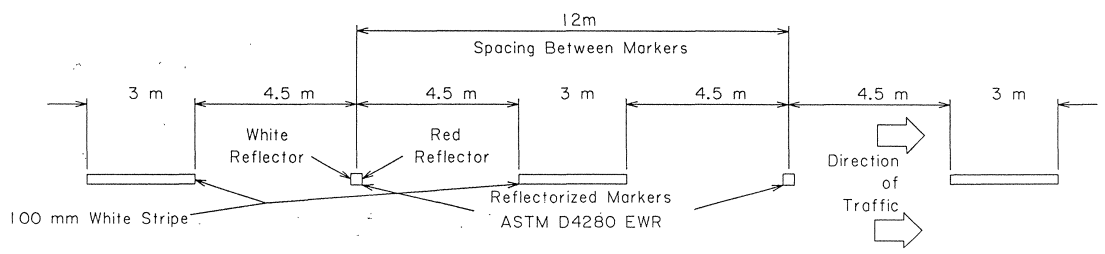

LAYOUT B

To Be Used for Lane Line Between Lanes of Traffic Traveling in the Same Direction

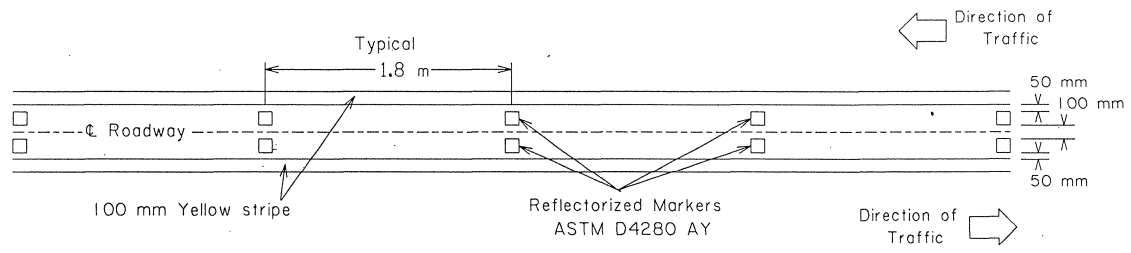

LAYOUT C

To Be Used Along ℄ of Multi-lane Undivided Roadway

LAYOUT D

To Be Used to Extend a Line Through an Intersection, an Interchange Area, or the Entrance of a Turn Bay, as Determined by the Plans or the District Traffic Operations Engineer.
Color & width shall be the same as that of the extended line.

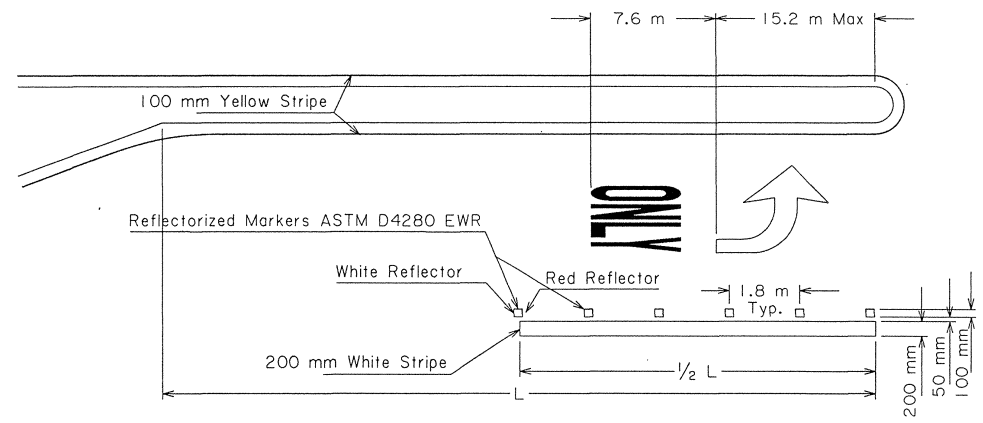

DETAIL OF TYPICAL LEFT TURN LANE

(Traffic Markers To Be Placed To Avoid Longitudinal Joint As Directed By The Project Engineer)
Arrows and Legend will be of White Thermoplastic Material

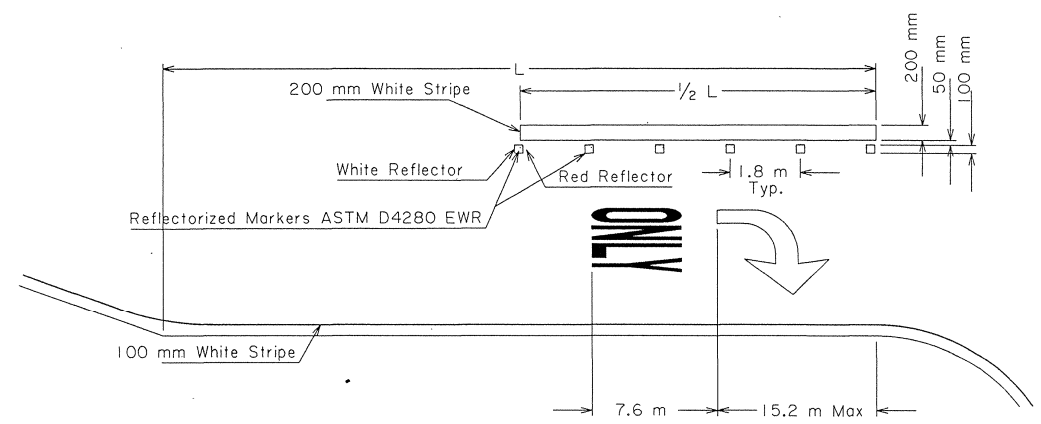

DETAIL OF TYPICAL RIGHT TURN LANE

(Traffic Markers To Be Placed To Avoid Longitudinal Joint As Directed By The Project Engineer)
Arrows and Legend will be of White Thermoplastic Material

SPECIAL NOTE ON TURN BAY LEGENDS:

Additional arrows and 'ONLY's may be placed in long turn Bays.
A minimum of 38 m shall separate each additional arrow from the previous arrow.
Additional 'ONLY's shall be placed 7.6 m from their respective arrow

TYPICAL REFLECTORIZED MARKER CONFIGURATIONS	TYPICAL USES
ASTM D4280 CLASSIFICATION: EWR WHITE BODY WHITE REFLECTOR FACING ONCOMING TRAFFIC RED REFLECTOR FACING WRONG-WAY TRAFFIC	LANE LINES EDGE LINES & CHANELLIZING
ASTM D4280 CLASSIFICATION: AY YELLOW BODY YELLOW REFLECTORS FACING EACH DIRECTION OF TRAFFIC	CENTERLINES & NO PASSING ZONES

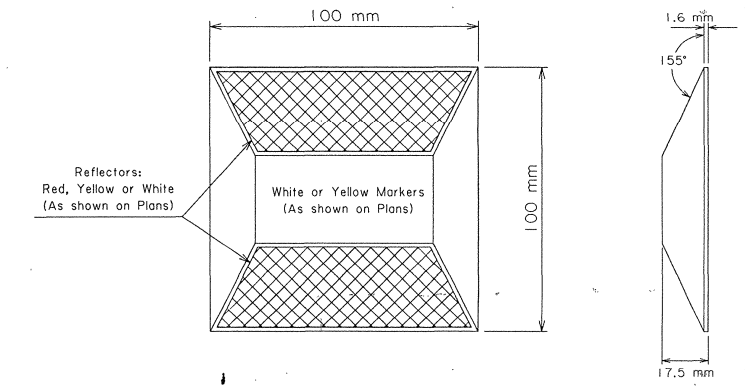

TYPICAL 100 mm x 100 mm REFLECTORIZED TRAFFIC MARKER

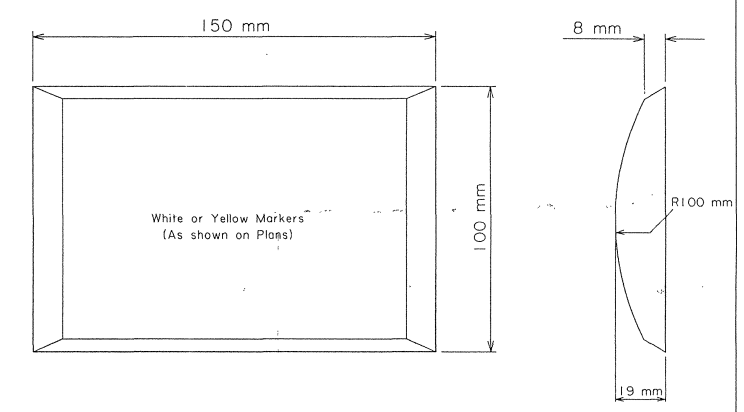

TYPICAL 100 mm x 150 mm NON-REFLECTORIZED TRAFFIC MARKER

NOTE
At Channelized Intersections Traffic Markers are to be placed as directed by the Project Engineer and as approved by the Diartict Traffic Operations Engineer.

DATE	DESCRIPTION	BY	APPROVED

REVISIONS

STANDARD PLAN NO. PM-01-M — 1 OF 4

METRIC DETAILS OF
RAISED TRAFFIC MARKERS
and PAVEMENT MARKINGS

DATED 1-21-92

STATE OF LOUISIANA
DEPARTMENT OF TRANSPORTATION AND DEVELOPMENT

DESIGNED A Caceres — DETAILED T Swanson
CHECKED D Beaty — CHECKED P Allain
APPROVED Original Signed by Chief Engineer DATE
CHIEF ENGINEER