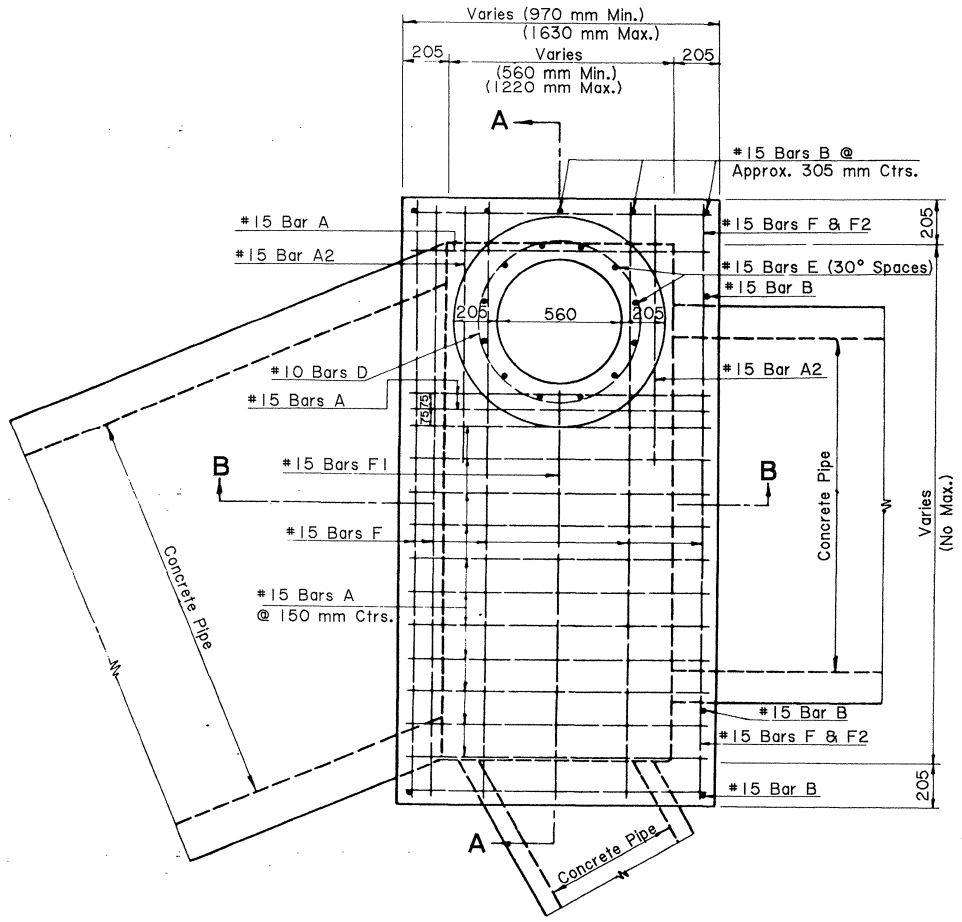

PLAN

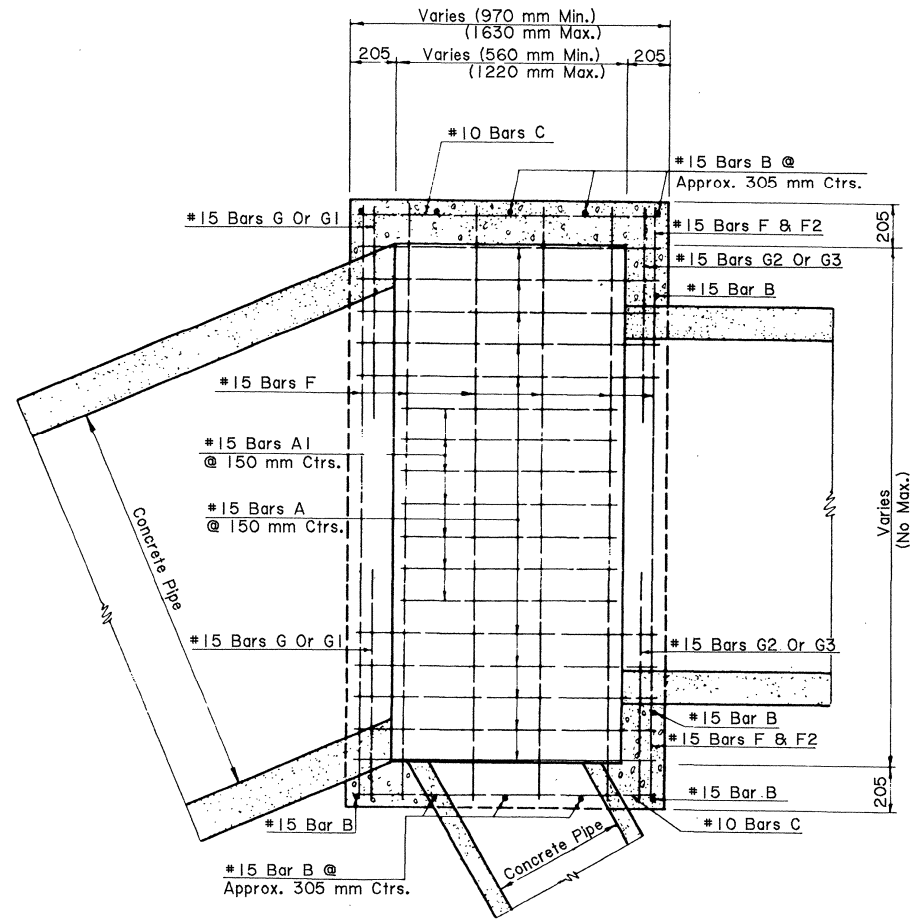

SECTION C-C

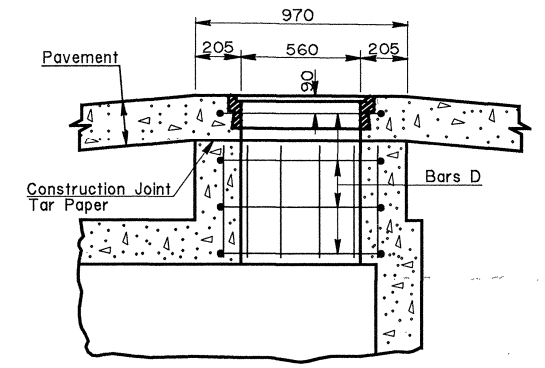

DETAIL A

(MANHOLE IN PAVEMENT AREA)

*See "Detail A" For Details Of Manhole In A Pavement Area

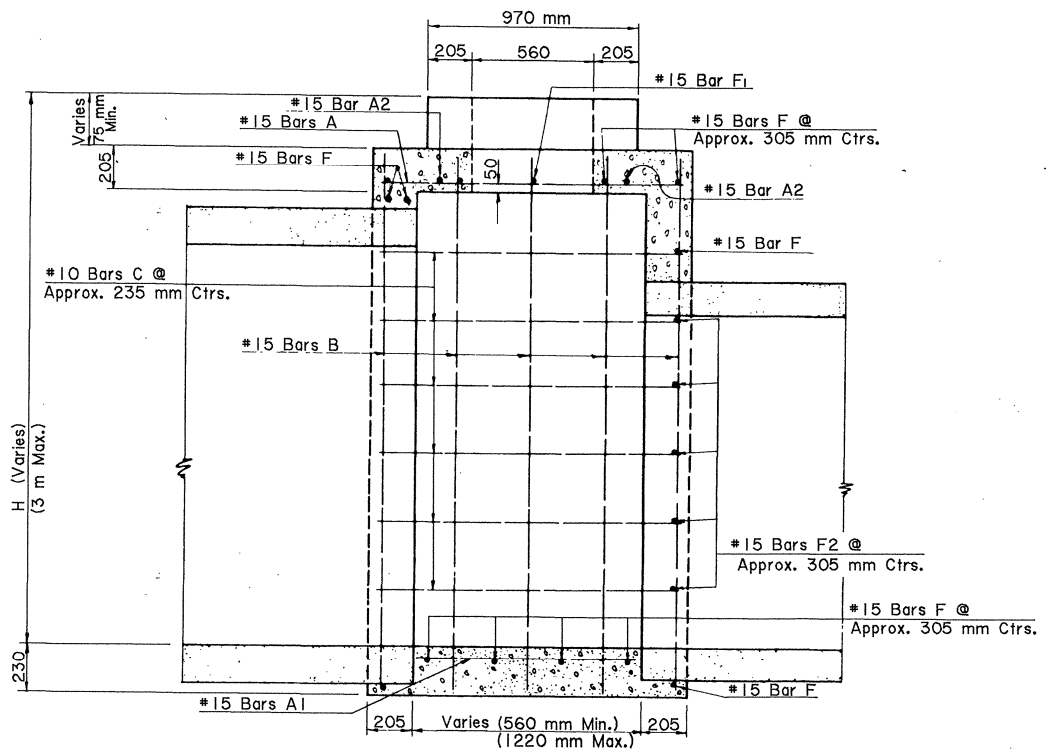

SECTION B-B

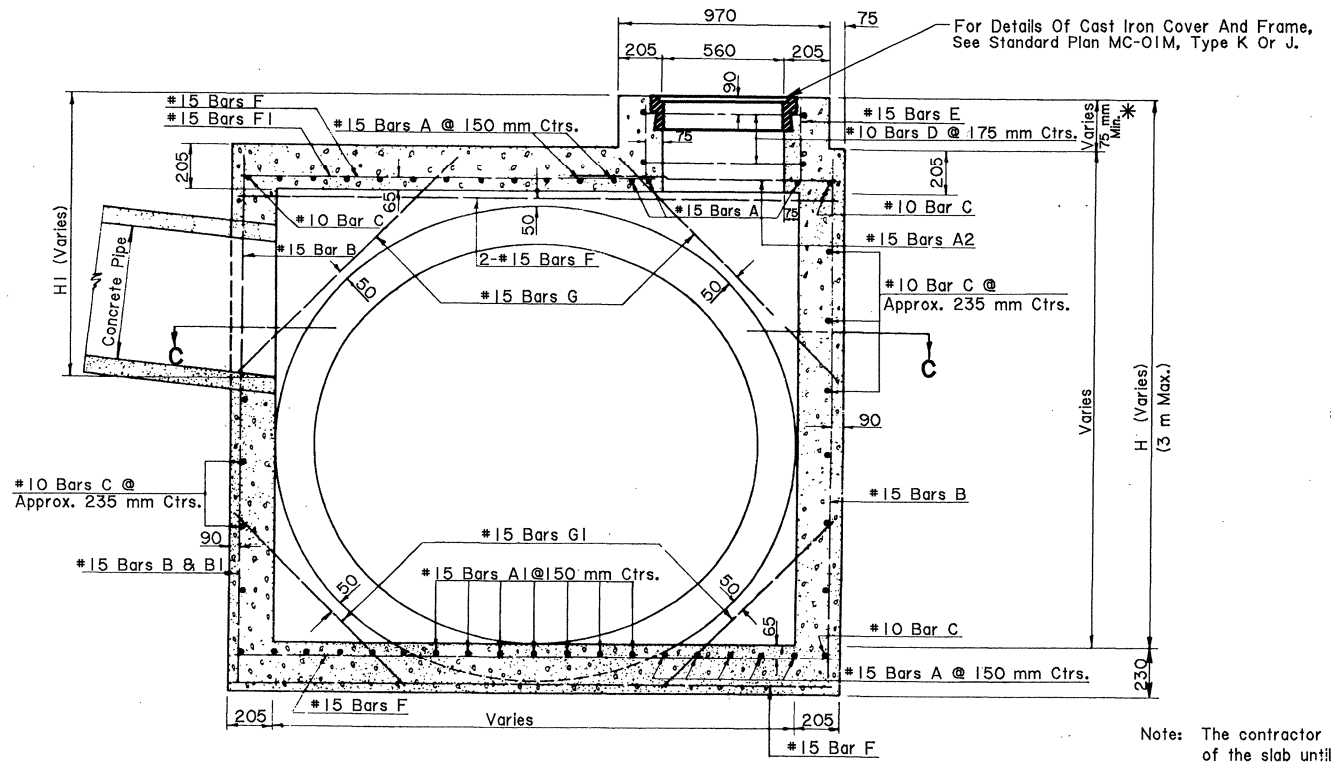

SECTION A-A

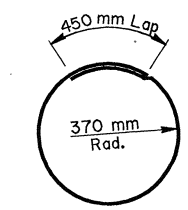

#10 BARS D

(Unit length = 2775 mm)

Note: The contractor will not pour above the bottom of the slab until the paving adjacent to the basin has been completed.

NOTE: ALL DIMENSIONS ARE IN MILLIMETERS UNLESS OTHERWISE NOTED.

SHEET NUMBER

PARISH | FEDERAL PROJECT | STATE PROJECT

STATE OF LOUISIANA DEPARTMENT OF TRANSPORTATION AND DEVELOPMENT

R.C. MANHOLE
900 mm Max. Pipe In End Wall X Open (No Max.)

STANDARD PLAN: MH-01M

HYDRAULICS SECTION

DESIGNED | CHECKED | DETAILED: KAJ | CHECKED: WMR | DATE: 8-20-97 | SHEET: 1 OF 1

APPROVED BY CHIEF ENGINEER: Original Signed by Chief Engineer | DATE: | BY | APPROVED | DATE:

REVISION DESCRIPTION

r:\dgn\metric\rasb\stdplans\manhole\mh11modm.dgn

19-MAY-1998 10:57