F.A.P.	STATE PROJECT	PARISH	SHEET NO.

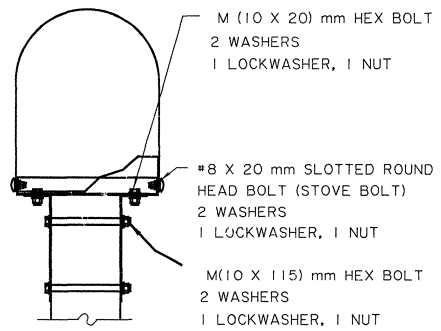

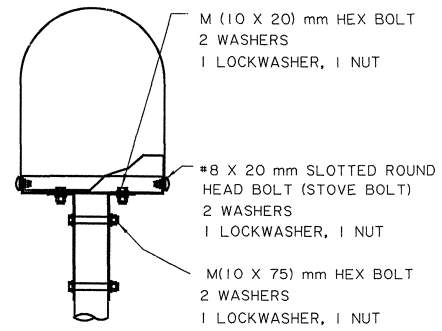

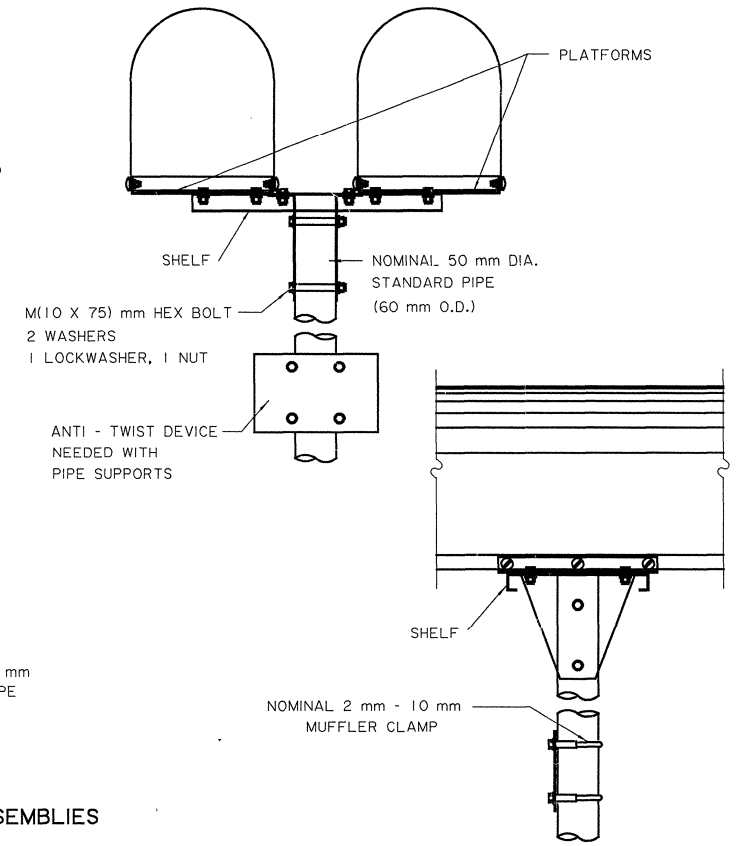

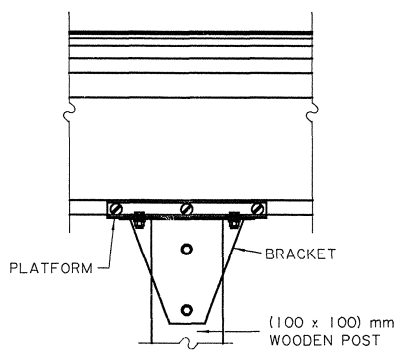

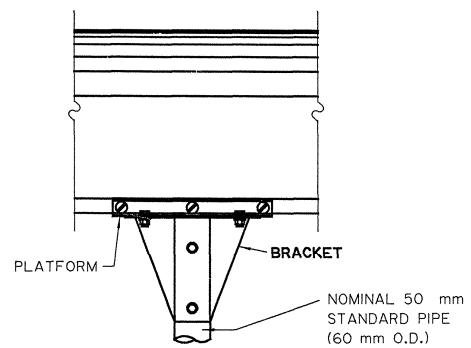

SINGLE AND DOUBLE MAILBOX ASSEMBLIES

SERIES A

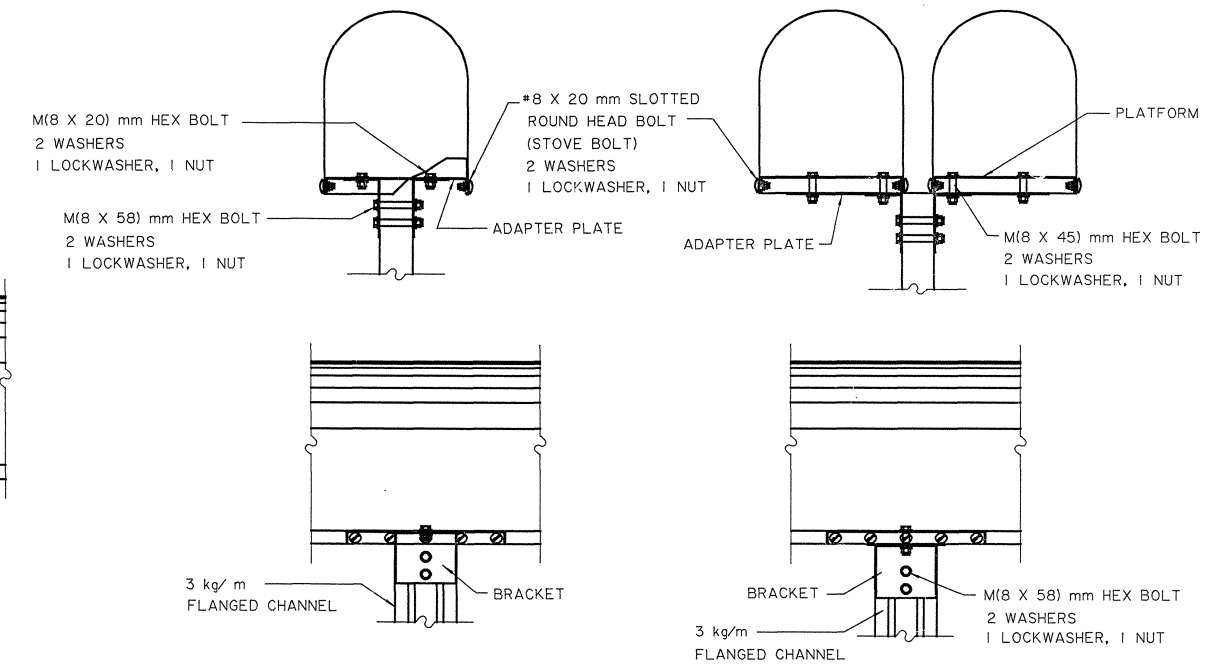

SINGLE AND DOUBLE MAILBOX ASSEMBLIES

SERIES B

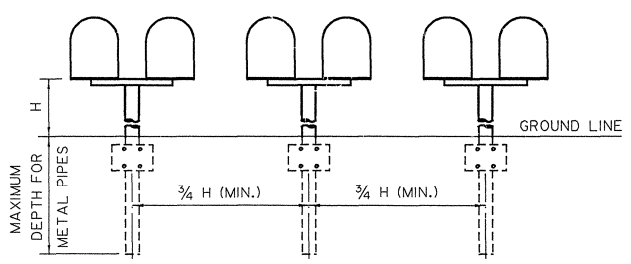

SPACING FOR MULTIPLE POST INSTALLATION

SERIES A

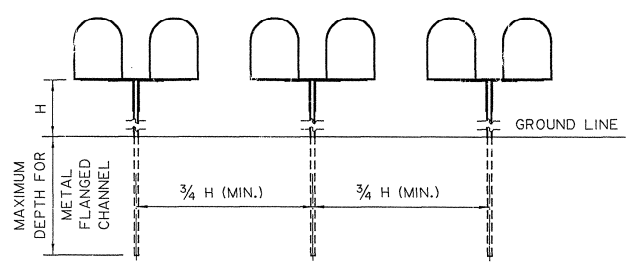

SPACING FOR MULTIPLE POST INSTALLATION

SERIES B

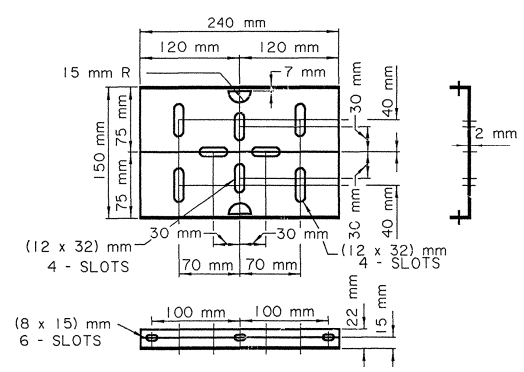

PLATFORM

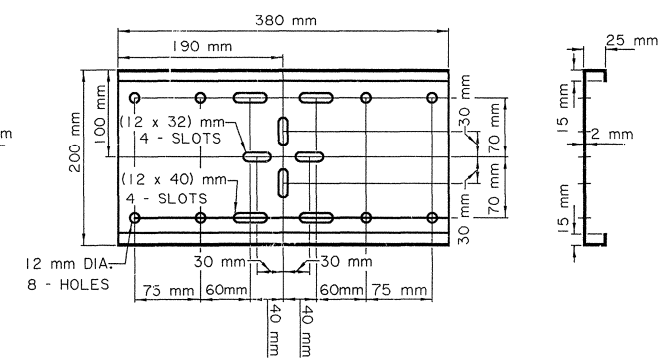

SHELF

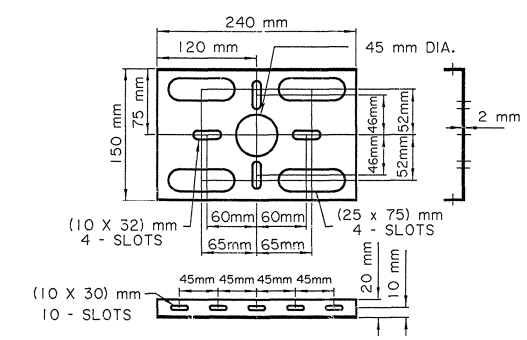

PLATFORM

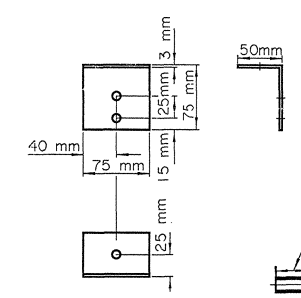

BRACKET

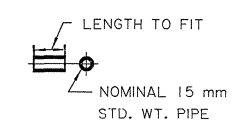

SPACER

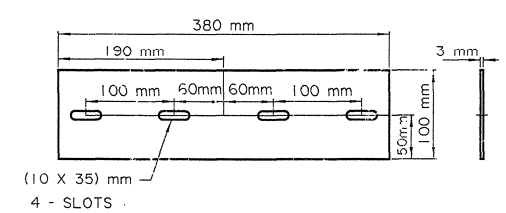

ADAPTER PLATE

MAILBOX SUPPORT HARDWARE

SERIES B

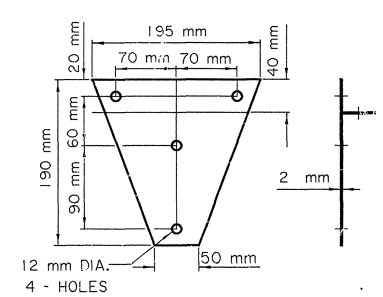

BRACKET

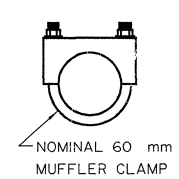

CLAMP

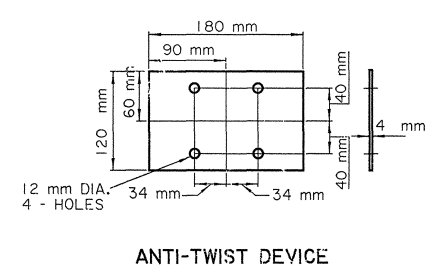

ANTI-TWIST DEVICE

MAILBOX SUPPORT HARDWARE

SERIES A

DATE	DESCRIPTION	BY
	REVISIONS	

STANDARD PLAN NO. MB-01(M) 2 SHEET OF 2

MAILBOX INSTALLATION DETAILS

DATED

STATE OF LOUISIANA
DEPARTMENT OF TRANSPORTATION AND DEVELOPMENT

DESIGNED	DETAILED	DCK
CHECKED	CHECKED S. McCain	FILE MB01-2.DGN
APPROVED Original Signed by Chief Engineer	DATE	
CHIEF ENGINEER		

MB01-2.DGN