	STATE PROJECT	PARISH	SHEET NO.

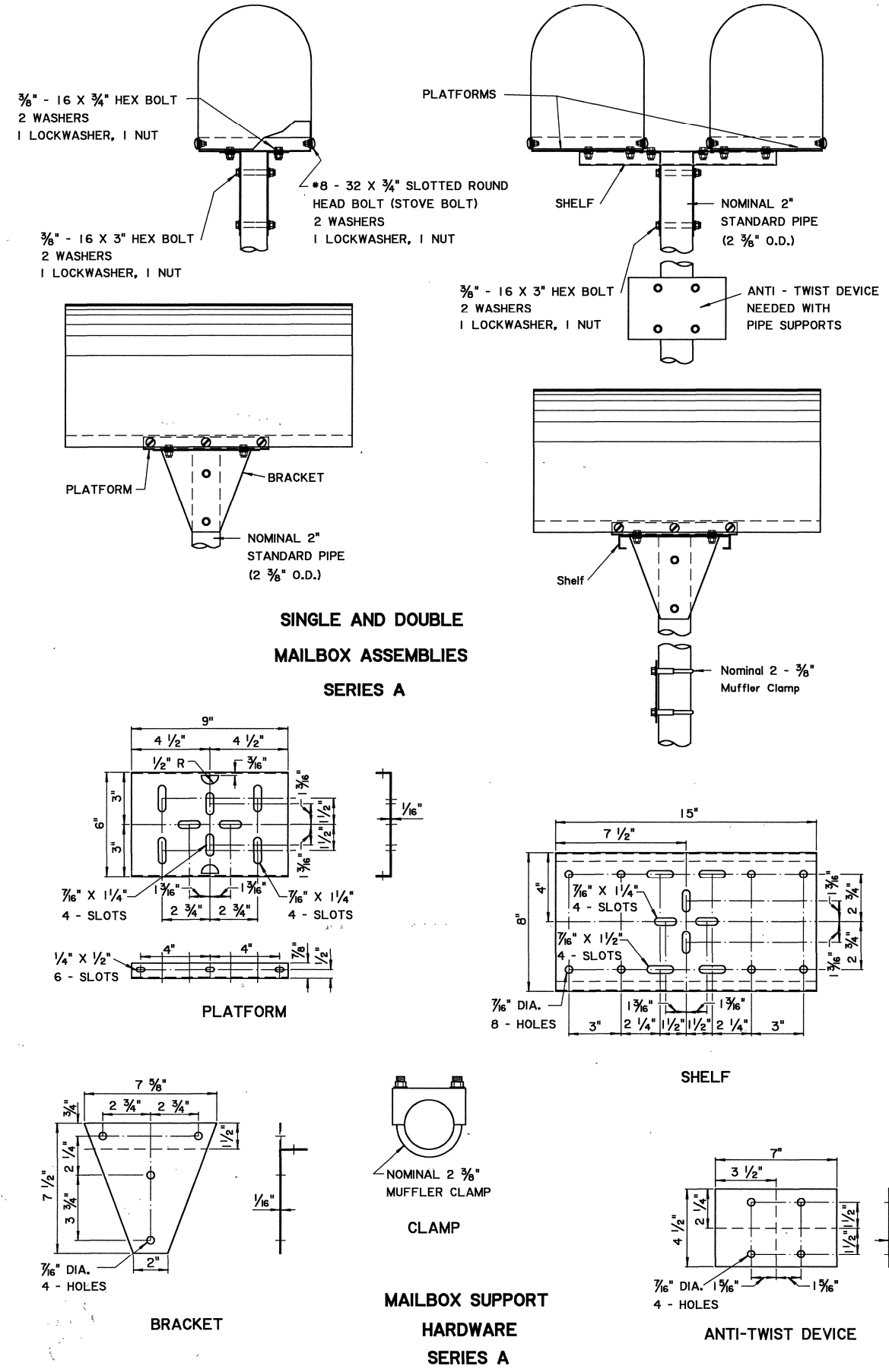

SINGLE AND DOUBLE MAILBOX ASSEMBLIES SERIES A

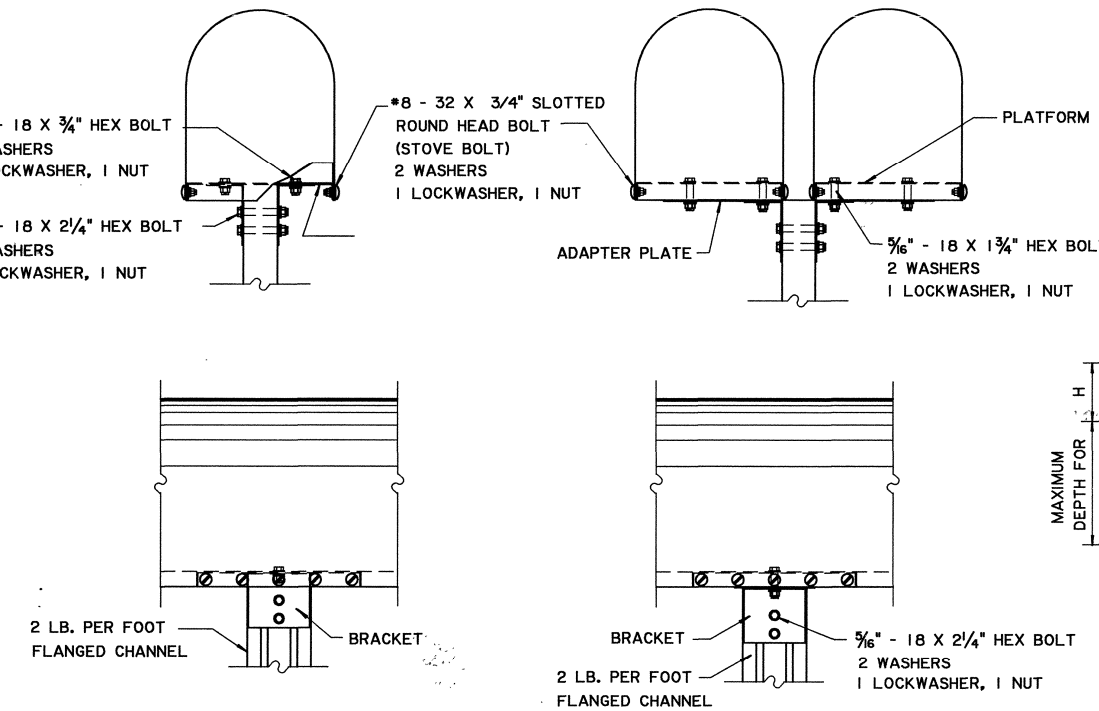

SINGLE AND DOUBLE MAILBOX ASSEMBLIES SERIES B

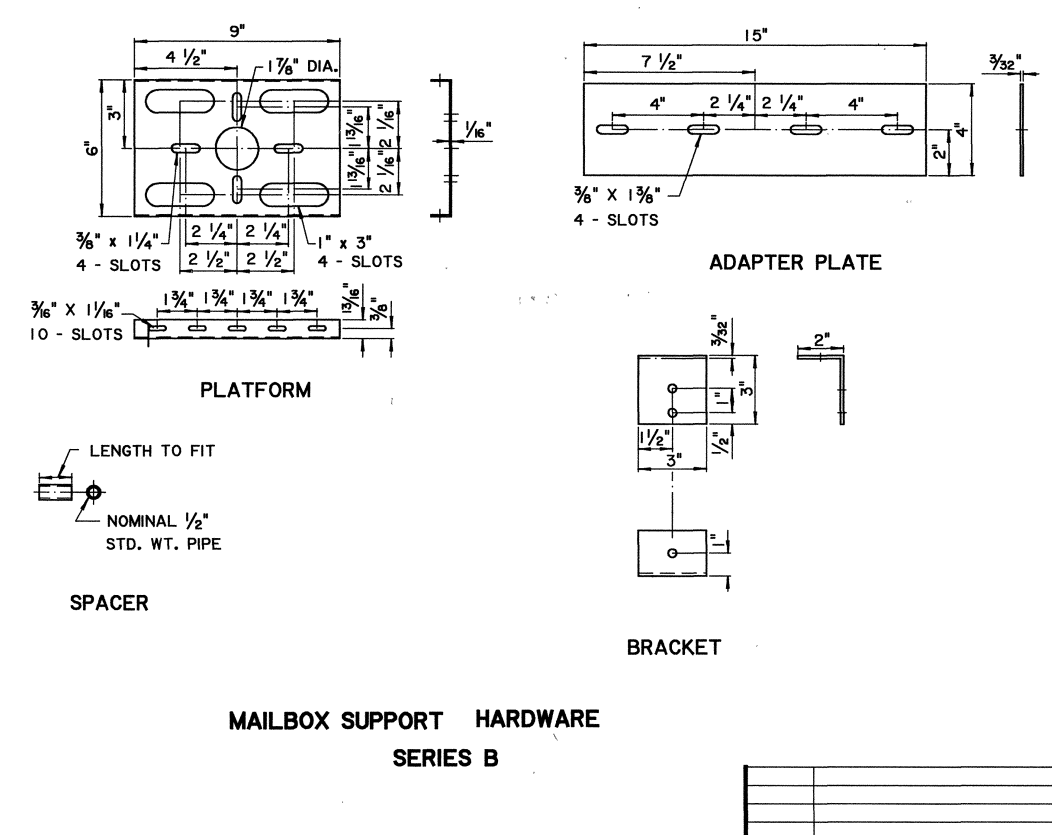

MAILBOX SUPPORT HARDWARE SERIES B

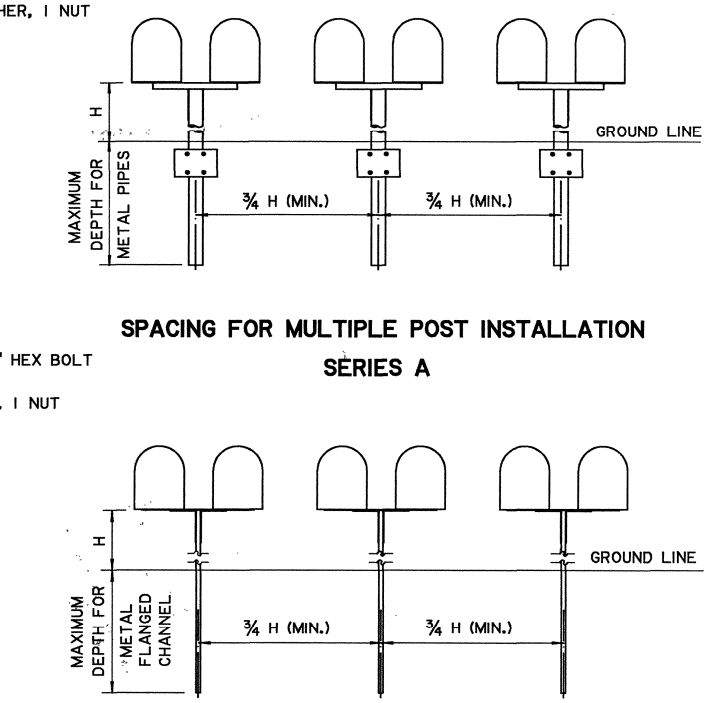

SPACING FOR MULTIPLE POST INSTALLATION SERIES A

SPACING FOR MULTIPLE POST INSTALLATION SERIES B

DATE	DESCRIPTION	BY	APPROVED

REVISIONS

STANDARD PLAN NO. MB-01 SHEET 2 OF 2

MAILBOX INSTALLATION DETAILS

DATED

STATE OF LOUISIANA
DEPARTMENT OF TRANSPORTATION AND DEVELOPMENT

DESIGNED	DETAILED N.Seal	CADD 2412 - D2499
CHECKED	CHECKED W. Hickey	FILE MB-01
APPROVED BY CHIEF ENGINEER: Original Signed by Chief Engineer DATE:		