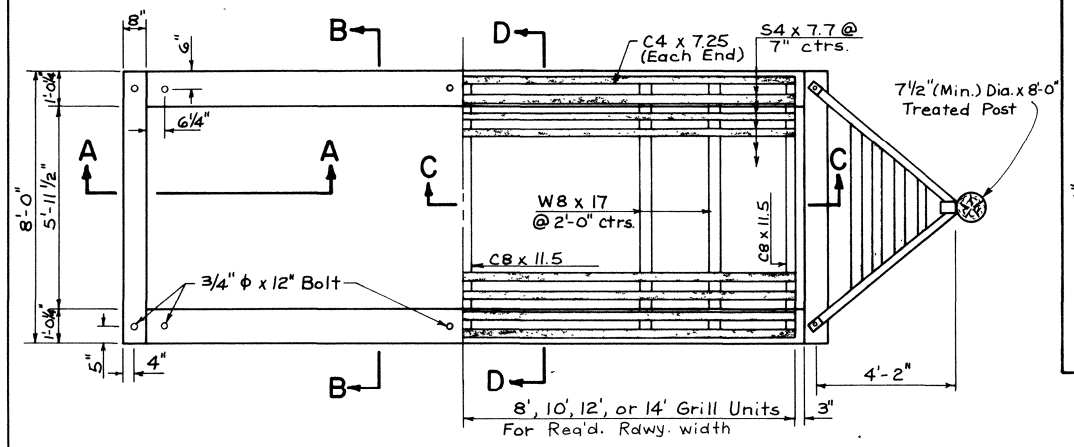

PLAN

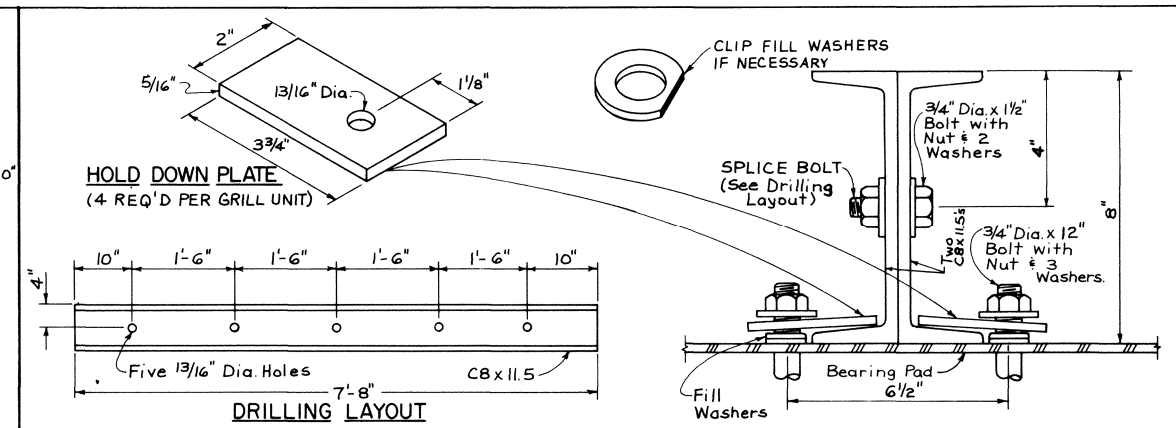

MULTIPLE GRILL UNIT CONNECTION

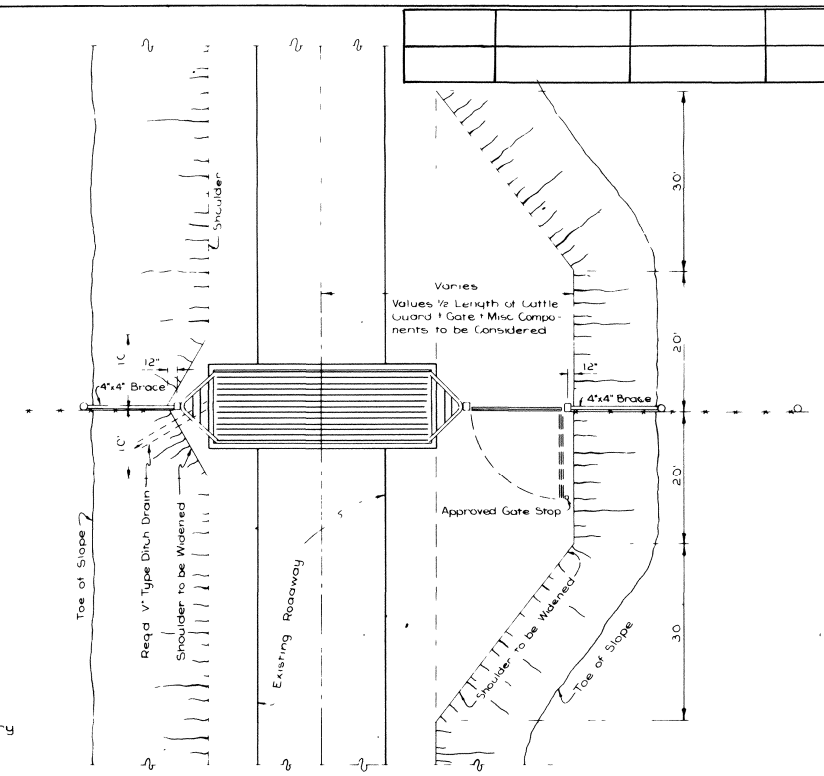

PLAN OF CATTLE GUARD ON STATE SECONDARY OR PARISH ROADS

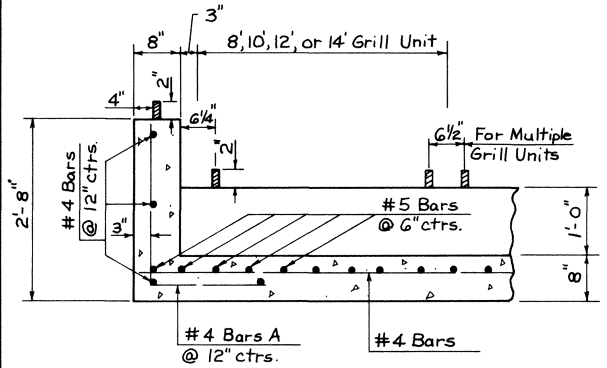

SECTION A-A

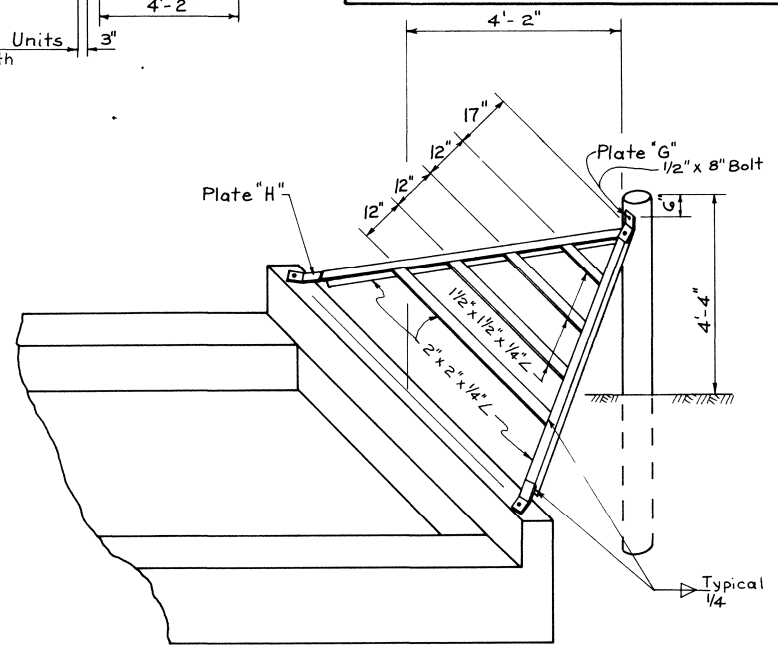

STEEL WING DETAIL

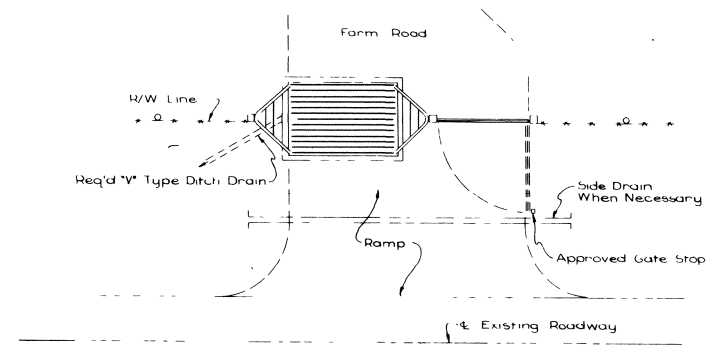

PLAN OF CATTLE GUARD ON R/W LINE

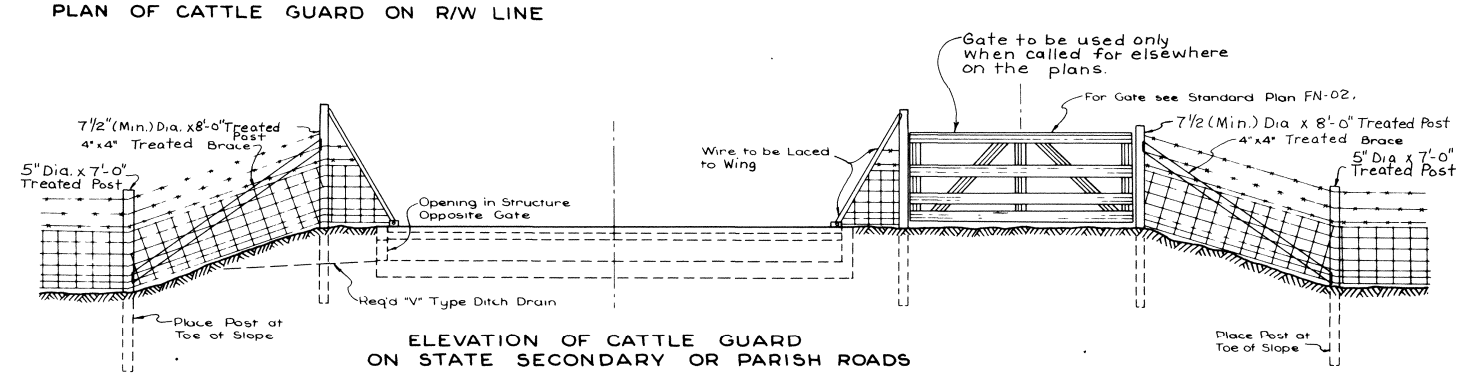

ELEVATION OF CATTLE GUARD ON STATE SECONDARY OR PARISH ROADS

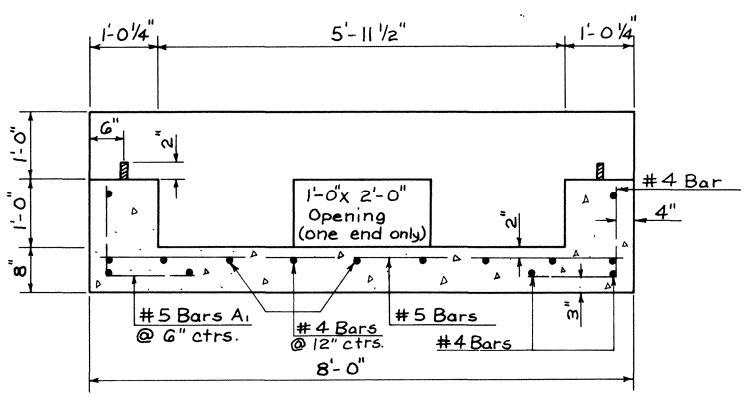

SECTION B-B

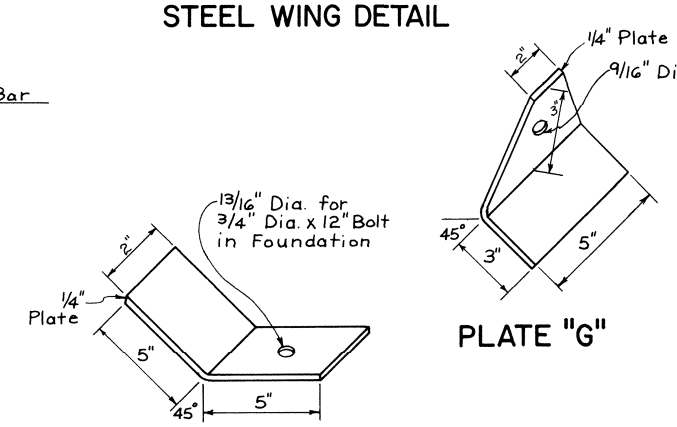

PLATE "G"

PLATE "H"

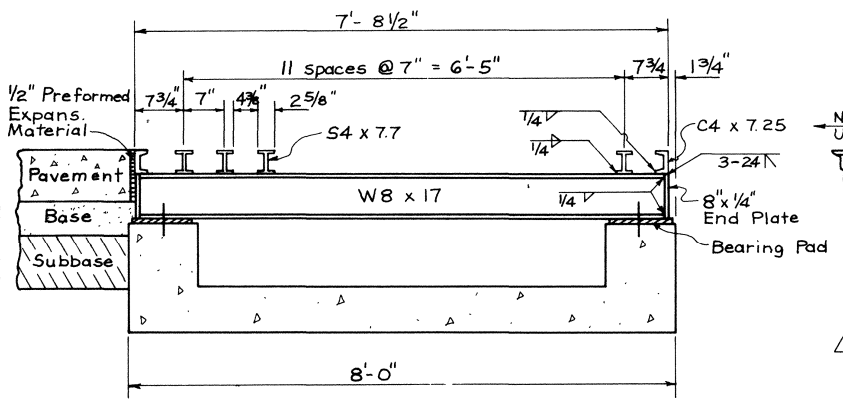

SECTION D-D

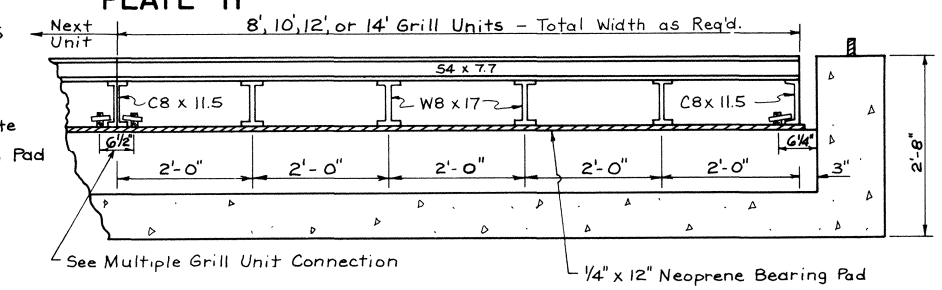

SECTION C-C

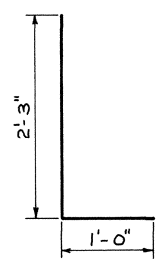

#4 BARS A

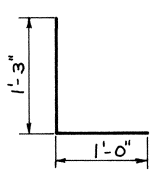

#5 BARS A₁

GENERAL NOTES:

Concrete shall be Class "A".

All structural steel shall conform to ASTM A-36.

Painting of Grill Units and Wings shall be an Organic Zinc Primer and Topcoat Systems according to Std. Spec. Section 811 and related Supplemental Specifications.

Welding shall conform to the D.O.T.D. Std. Specifications and the D.O.T.D. Welding Procedures Manual.

DATE	DESCRIPTION	BY

REVISIONS

Standard Plan No. KG-01 — SHEET 1 OF 1

CATTLE GUARD

HS20-44 (MS-18) LOADING

DATED Oct. 19, 19 81

STATE OF LOUISIANA
DEPARTMENT OF TRANSPORTATION & DEVELOPMENT

DESIGNED CDJ	DETAILED JCM	TRACED KAJ
CHECKED JCM	CHECKED CDJ	CHECKED CDJ

APPROVED Original Signed by Chief Engineer — CHIEF ENGINEER — DATE