| F.A.P. | STATE PROJECT | PARISH | SHEET NO. |
|---|---|---|---|
| | | | |

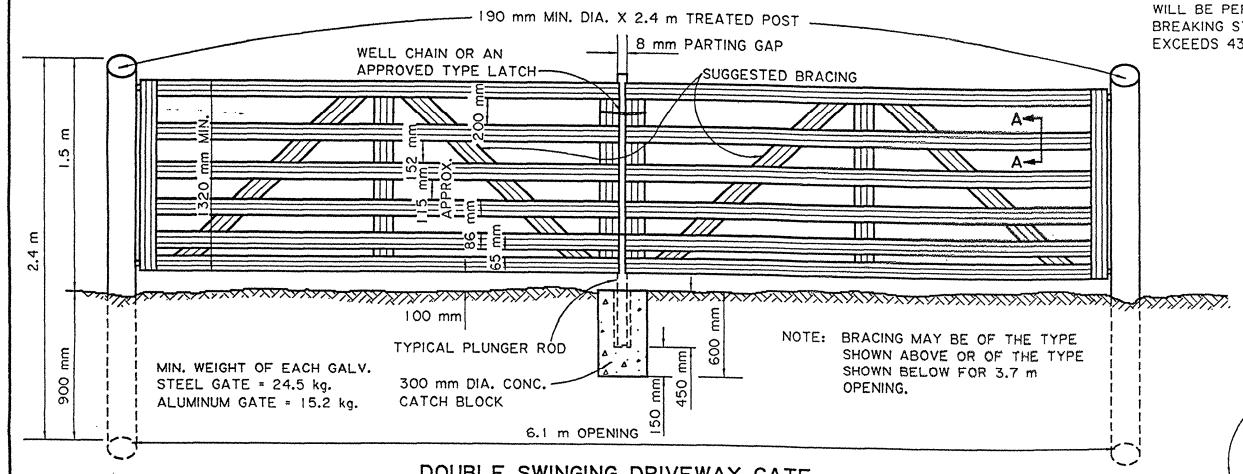


MIN. WEIGHT OF EACH GALV. STEEL GATE = 24.5 kg.
ALUMINUM GATE = 15.2 kg.

NOTE: BRACING MAY BE OF THE TYPE SHOWN ABOVE OR OF THE TYPE SHOWN BELOW FOR 3.7 m OPENING.

## DOUBLE SWINGING DRIVEWAY GATE (ALUMINUM OR GALVANIZED STEEL)

(SUGGESTED TYPE)

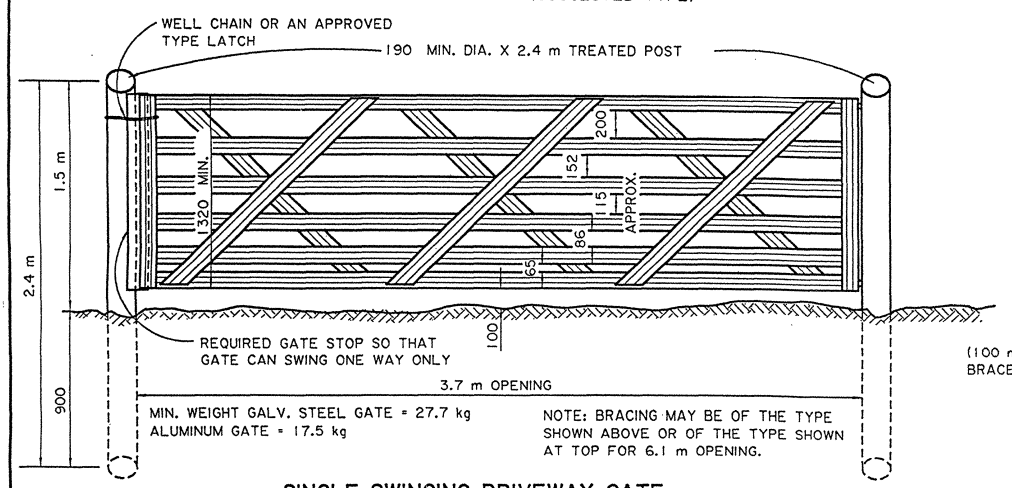


MIN. WEIGHT GALV. STEEL GATE = 27.7 kg
ALUMINUM GATE = 17.5 kg

NOTE: BRACING MAY BE OF THE TYPE SHOWN ABOVE OR OF THE TYPE SHOWN AT TOP FOR 6.1 m OPENING.

## SINGLE SWINGING DRIVEWAY GATE (ALUMINUM OR GALVANIZED STEEL)

(SUGGESTED TYPE)

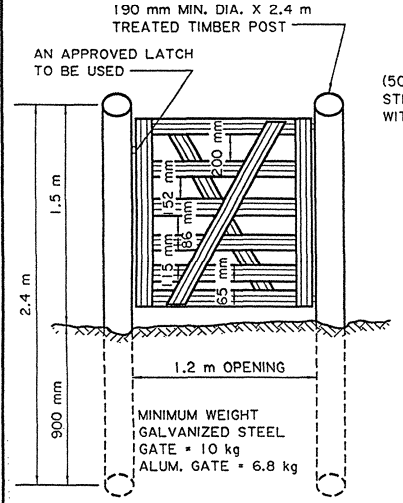


## SINGLE SWINGING WALKGATE (ALUMINUM OR GALVANIZED STEEL)

(SUGGESTED TYPE)

NOTE: GATES ARE TO OPEN AWAY FROM HIGHWAY UNLESS OTHERWISE DIRECTED BY ENGINEER.

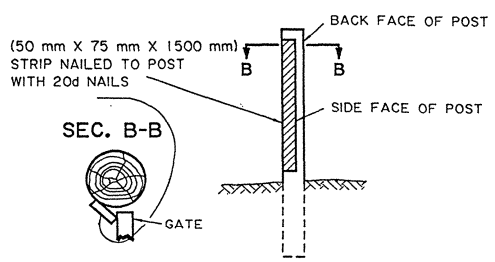


## DETAIL AT STOP FOR WOODEN GATE POST

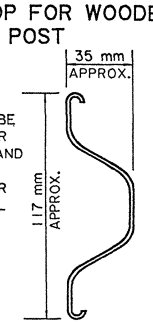


HORIZONTAL PANELS TO BE 1.30 mm THICK (MIN.) (FOR ALUM. GATE). VERTICAL AND DIAGONAL BRACES TO BE 1.02 mm THICK (MIN.) (FOR ALUM. GATE). HORIZONTAL PANELS, VERTICAL AND DIAGONAL BRACE TO BE 0.635 mm THICK (MIN.) (FOR GALV. GATE).

## TYPICAL SECTION THRU PANEL SECTION A-A

⊙NOTE: 13 1/2 OR 15 1/2 GAGE BARBED WIRE WILL BE PERMITTED, PROVIDED THE BREAKING STRENGTH OF THE WIRE EXCEEDS 430 kg.

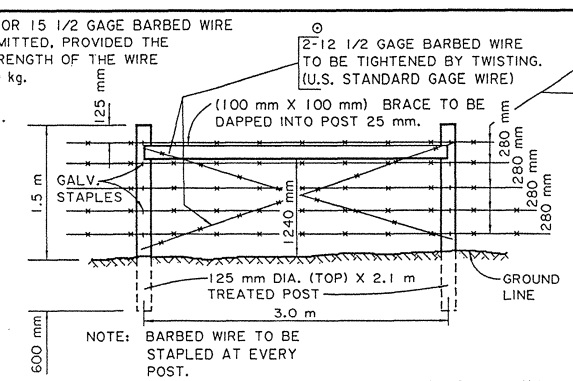


NOTE: BARBED WIRE TO BE STAPLED AT EVERY POST.

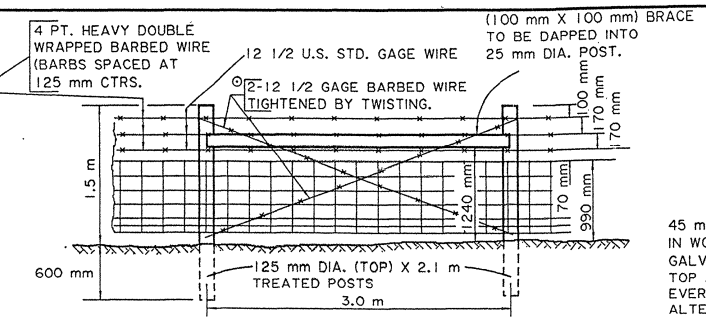


NOTE: ALL LINE POSTS TO BE 2.1 m (MIN.) LENGTH AND SPACED ON 3.0 m CENTERS (MAX.)

## SHOWING BRACES IN STRAIGHT LINE OF FENCE*

45 mm GALV. STAPLES TO BE USED IN WOODEN POSTS.
GALV. STAPLES TO BE PLACED ON TOP AND BOTTOM STRANDS AND EVERY OTHER WIRE BETWEEN, ALTERNATING ON SUCCESSIVE POSTS.

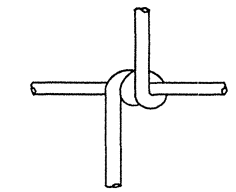

## DETAIL OF HINGED JOINT

NOMINAL DIAMETER OF ZINC-COATED WIRE, 2.5 mm
VARIATION ± 0.1 mm
(DESIGN NO. 939-6-12 1/2)

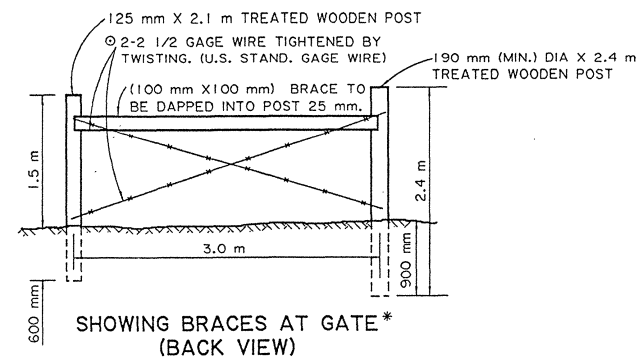


## SHOWING BRACES AT GATE*

(BACK VIEW)

(FENCE NOT SHOWN)

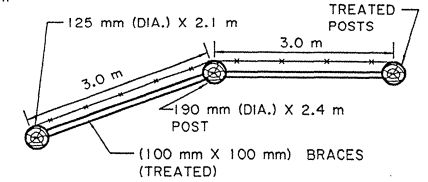


## SHOWING BRACES AT OBLIQUE* ANGLE CORNERS

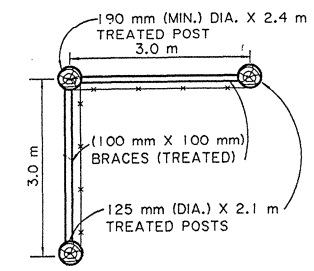


## SHOWING BRACES AT RIGHT ANGLE CORNERS*

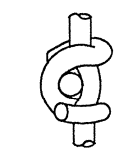

## DETAIL OF STIFF STAY KNOT JOINT

NOMINAL DIAMETER OF ZINC-COATED WIRE, 2.5 mm
VARIATION ± 0.1 mm
(DESIGN NO. 939-6-12 1/2)

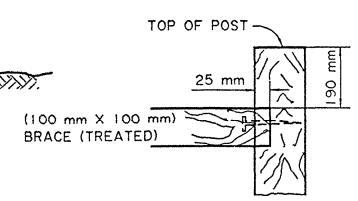


## DETAIL OF BRACE DAPPED INTO POST

NOTE:
METAL LINE POSTS MAT BE USED IN CONJUNCTION WITH WOODEN CORNER GATE AND BRACE POSTS, PROVIDED THAT METAL AND WOODEN POSTS ARE NOT MIXED BETWEEN CORNER POSTS.

*NOTE:
FOR ALTERNATE METHOD OF BRACING SEE SHT. 2 OF THIS STANDARD (FN-02).

NOTE: BRACES SHALL BE PLACED ON STRAIGHT SECTIONS OF FENCE NOT MORE THAN 150 m APART.

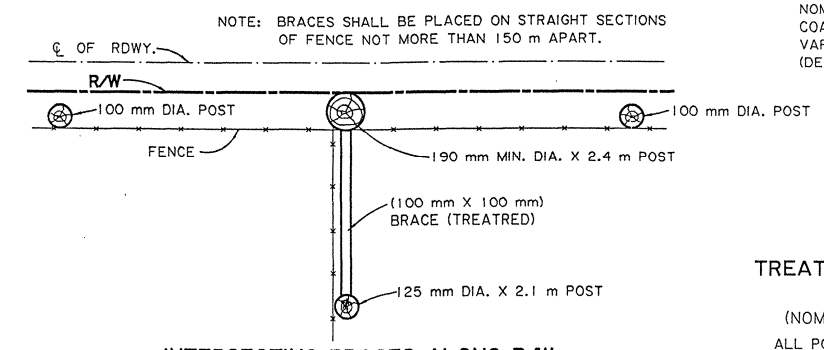


## INTERSECTING BRACES ALONG R/W TO BE INSTALLED IN FENCES*

ALL INTERSECTING FENCES TO BE SECURELY ATTACHED TO FRONTAGE FENCE AS SHOWN HERE.

## TREATED WOODEN LINE POST

(NOMINAL 100 mm DIAM.)

ALL POST DIAMETERS ARE MEAN DIAM. AT SMALL END.
ALL WOODEN POSTS AND BRACES SHALL BE EITHER ROUND OR SAWED.

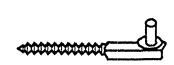

## SUGGESTED TYPE SCREW HOOK HINGE FOR WOODEN POST

20 mm X 190 mm SCREW HOOK HINGE

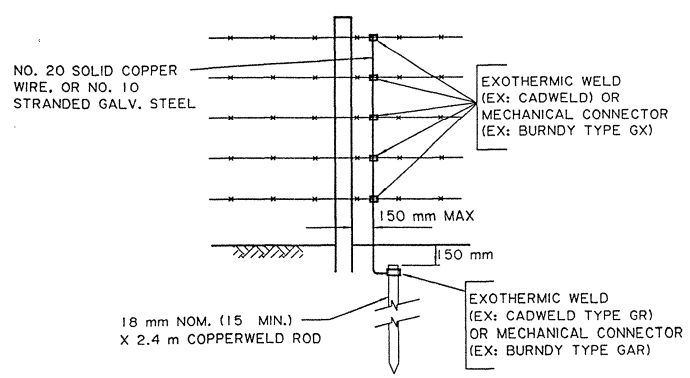


## 5-STRAND BARBED WIRE

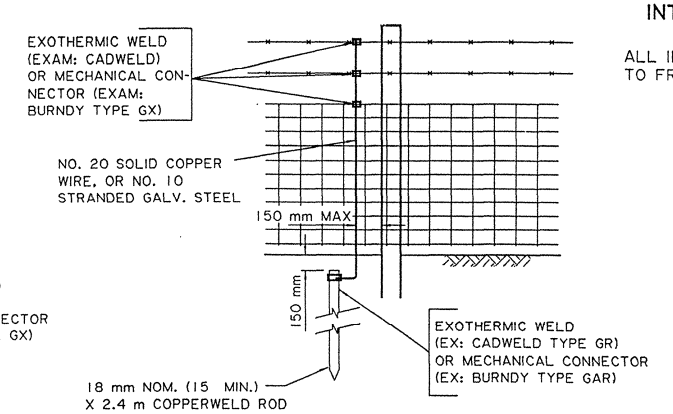


## COMBINATION MESH & BARBED WIRE

NOTE: GROUNDING DEVICES ARE TO BE INSTALLED IN ACCORDANCE WITH THE STANDARD SPECIFICATIONS.

CONNECTION TO ALUMINUM ALLOY OR ALUMINUM COATED FENCE TO BE MADE WITH STEEL MECHANICAL CONNECTORS. ALL OTHER MECHANICAL CONNECTORS TO BE BRONZE.

ALL CONNECTION METHODS TO BE APPROVED BY PROJECT ENGINEER.

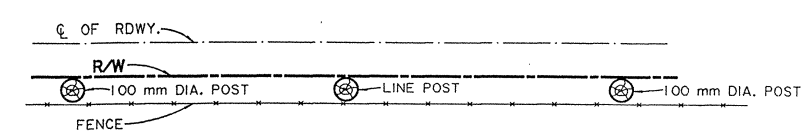


## DETAIL SHOWING LOCATION OF FENCE IN RELATION TO THE R/W LINE

NOTE: LINE POST TO BE LOCATED OUTSIDE OF R/W LINE.
WIRE TO BE PLACED ON OUTSIDE OF R/W, UNLESS OTHERWISE DIRECTED BY ENGINEER OR REQUESTED BY PROPERTY OWNER AND APPROVED BY ENGINEER.
FOR CONTROL OF ACCESS, LINE POST TO BE LOCATED WITHIN HIGHWAY R/W.

## GROUNDING DETAILS

| DATE | DESCRIPTION | BY |
|---|---|---|
| | | |
| | | |
| | | |
| | | |

REVISIONS

STANDARD PLAN NO. FN-02(M) | SHEET 1 OF 2

# FIELD AND LINE TYPE FENCE (WOOD POST)

DATED

STATE OF LOUISIANA
DEPARTMENT OF TRANSPORTATION AND DEVELOPMENT

| DESIGNED | DETAILED | DIR |
|---|---|---|
| CHECKED | CHECKED S. McCain | FILE FN02-1.DGN |

APPROVED Original Signed by Chief Engineer DATE 2-4-92
CHIEF ENGINEER

FN02-1.DGN