	STATE PROJECT	PARISH	SHEET NO.

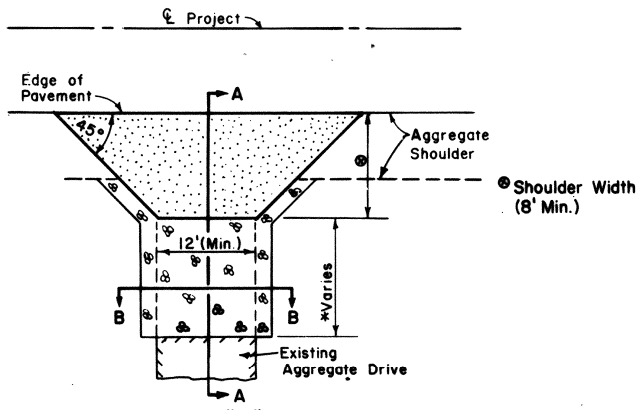

TYPE "A"
PAVED DRIVE ALONG AGGREGATE SHOULDER

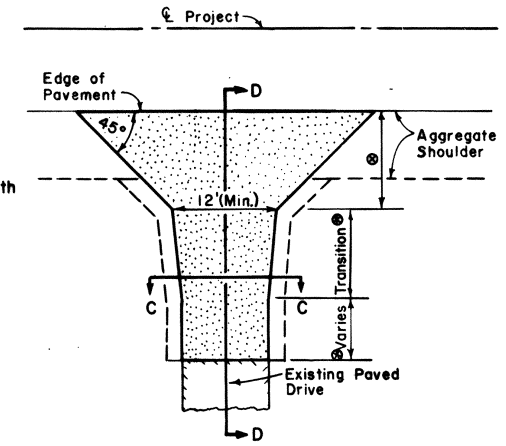

TYPE "B"
PAVED DRIVE ALONG AGGREGATE SHOULDER CONNECTING EXISTING PAVED DRIVE

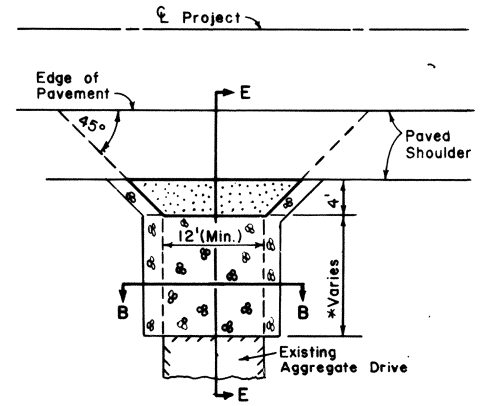

TYPE "C"
PAVED DRIVE ALONG PAVED SHOULDER

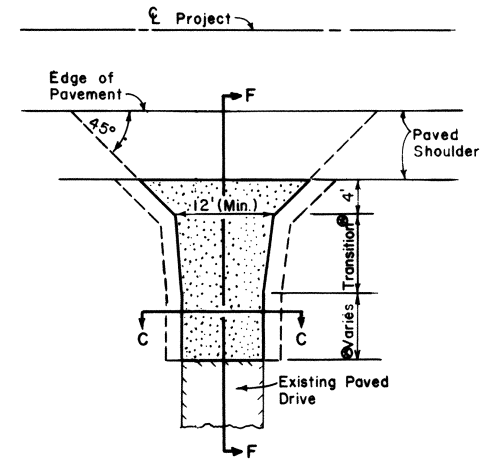

TYPE "D"
PAVED DRIVE ALONG PAVED SHOULDER CONNECTING EXISTING PAVED DRIVE

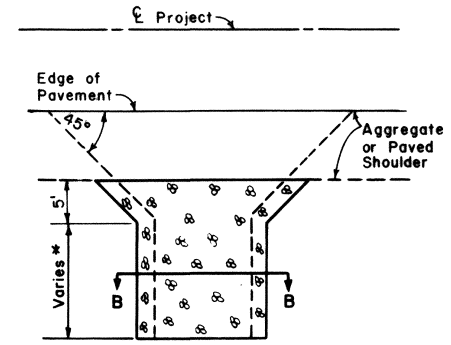

TYPE "E"
AGGREGATE SURFACE COURSE DRIVE TO BE USED AT LOCATIONS WHERE DRIVE DOES NOT CONNECT TO RESIDENCE OR COMMERCIAL ESTABLISHMENTS

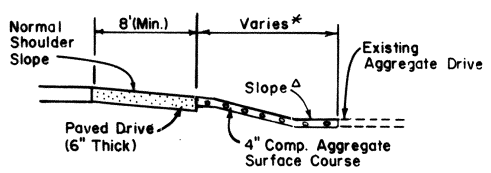

SECTION A-A

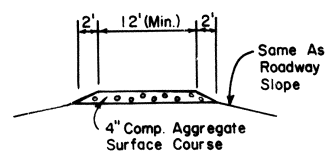

SECTION B-B

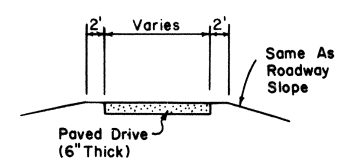

SECTION C-C

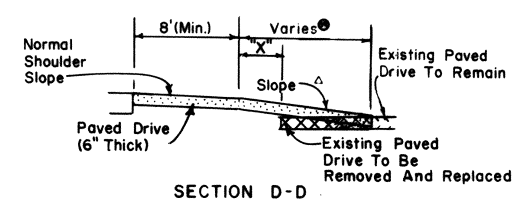

SECTION D-D

Note: If "X" Is Greater Than 8', Aggregate Surface Course To Be Used Within Limits Of "X" Dimension

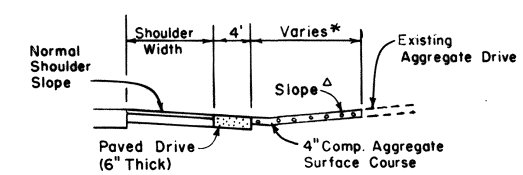

SECTION E-E

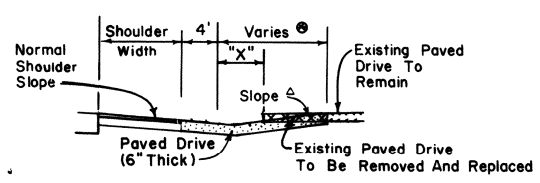

SECTION F-F

Note: If "X" Is Greater Than 8', Aggregate Surface Course To Be Used Within Limits Of "X" Dimension.

*Length To Be Set By The Project Engineer

Notes:

1. Portland Cement Concrete Drives [To Be Paid For Under Item No. 706(2)] Will Be Constructed Only To Replace Or Connect To Existing Concrete Drives. All Other Drives Are To Be Asphaltic Concrete, Except Aggregate Surface Course Is To Be Used On Infrequently Used Drives Which Do Not Connect To Residences Or Commercial Establishments.

⊗2. Applies Where Existing Paved Drive Is To Be Removed For Roadway Construction And/Or To Achieve Vertical Geometry Requirements.

3. Asphaltic Concrete For Paved Drives Shall Be Asphaltic Concrete Wearing Course (Type 1, 2 Or 4) Or At The Option Of The Contractor, Shoulder Mix May Be Used. Also, When Paved Drives Are Placed In Two Lifts, Binder Course May Be Used In The First Lift.

4. Compaction Of Subgrade And Grading Work For Construction Of The Paved Drives Shall Be Satisfactory To The Engineer And Shall Be At No Direct Payment.

△5. Maximum Driveway Grade Shall Be 20% (25% For Special Cases). Maximum Breaks In Grade Shall Be 10%, At Not Less Than 10' Intervals.

DATE	DESCRIPTION	BY
9-21-82	General Revisions	HJB

REVISIONS

STANDARD PLAN NO. DW-03 SHEET 1 OF 1

RURAL DRIVEWAY DETAILS

DATED July 2, 1981

STATE OF LOUISIANA
DEPARTMENT OF TRANSPORTATION & DEVELOPMENT
OFFICE OF HIGHWAYS

DESIGNED W. JUELG	DETAILED C. LOUQUE	TRACED C LOUQUE
CHECKED	CHECKED	CHECKED
APPROVED Original Signed by Chief Engineer		DATE
CHIEF ENGINEER		