F.A.P.	STATE PROJECT	PARISH	SHEET NO.

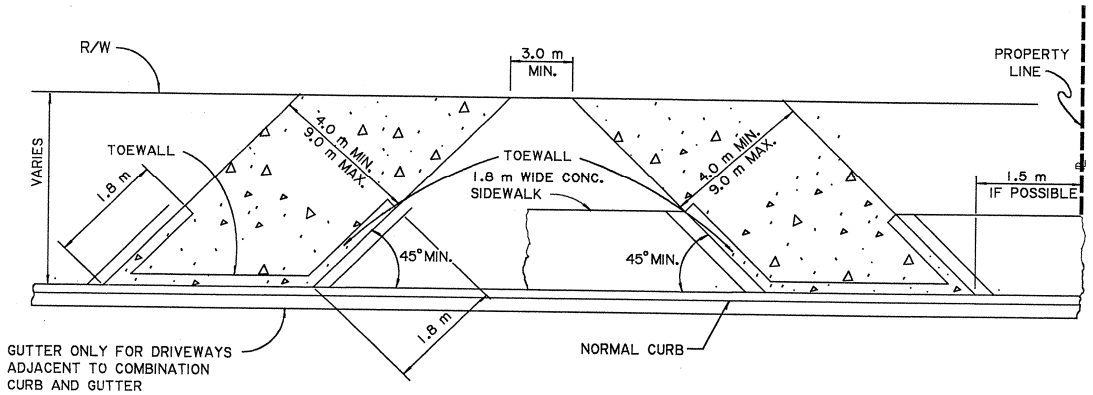

DOUBLE RESIDENTIAL SKEWED DRIVE

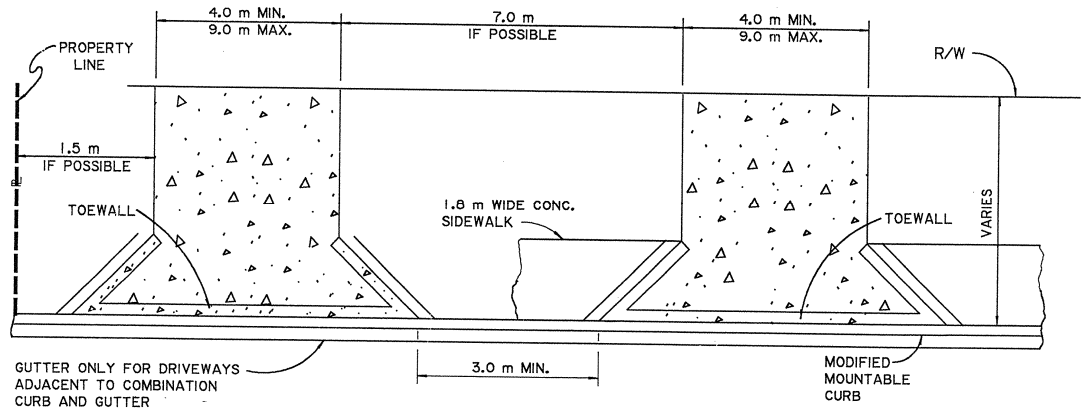

SINGLE ADJACENT RESIDENTIAL DRIVES

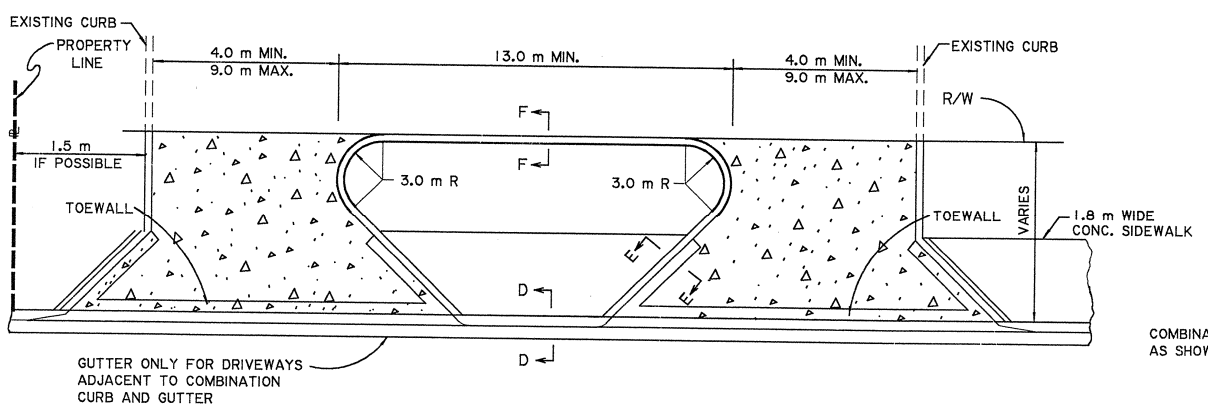

DETAILS OF DRIVEWAY WITH ISLAND

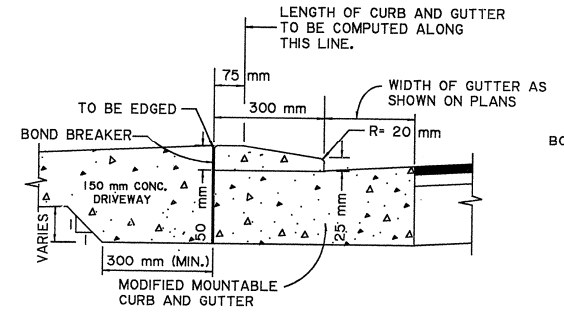

FOR DRIVEWAYS ADJACENT TO COMBINATION CURB AND GUTTER

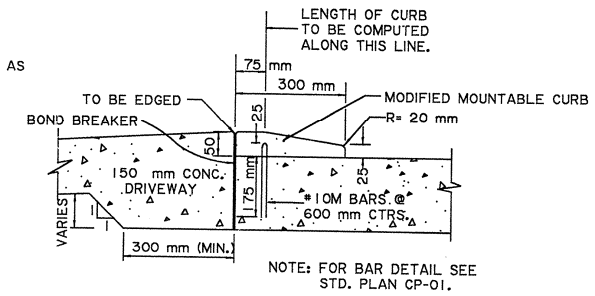

NOTE: FOR BAR DETAIL SEE STD. PLAN CP-01.

FOR DRIVEWAYS ADJACENT TO INTEGRAL CURB

SECTION A-A

NOTES: 1) NEAT CEMENT OR EPOXY REQUIRED IN TOP 50 mm BETWEEN CURB AND PAVEMENT.
2) TOEWALL TO BE POURED MONOLITHIC.

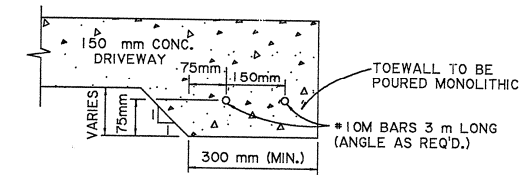

SECTION B-B

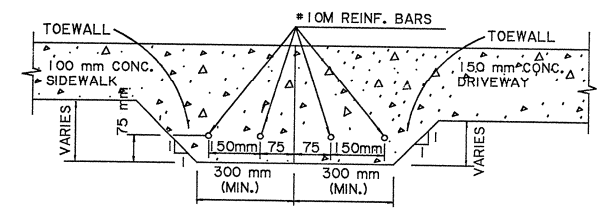

SECTION C-C

NOTE: TOEWALL TO BE POURED MONOLITHIC.

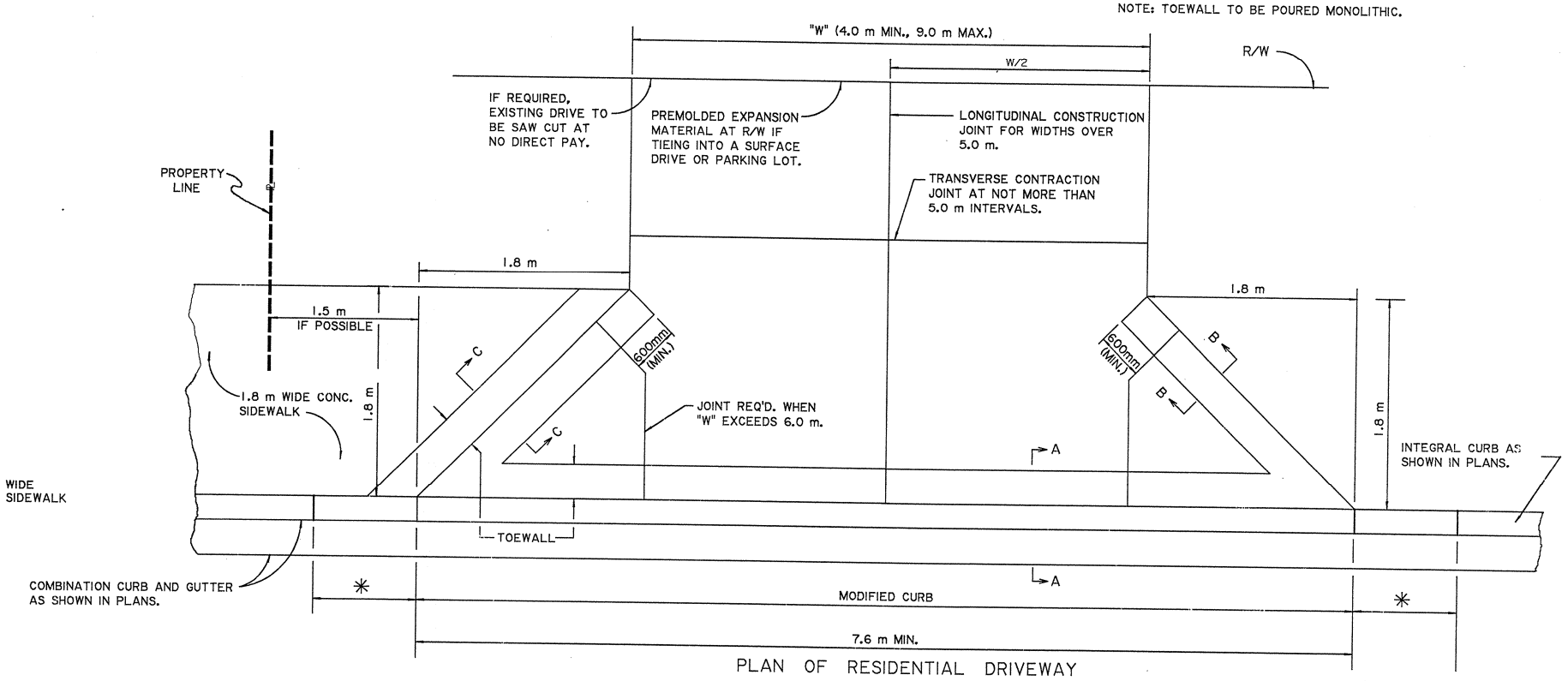

PLAN OF RESIDENTIAL DRIVEWAY

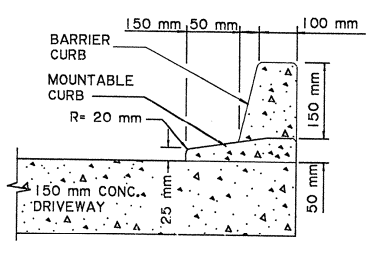

SECTION D-D

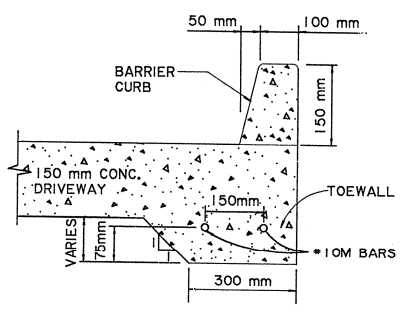

SECTION E-E

NOTE: TOEWALL TO BE POURED MONOLITHIC.

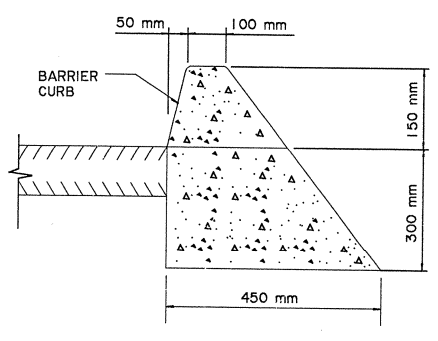

SECTION F-F

✳ REQUIRED 1.0 m VERTICAL TRANSITION CURB.

DATE	DESCRIPTION	BY
	REVISIONS	

STANDARD PLAN NO. DU-01(M) | SHEET 1 OF 2

URBAN DRIVEWAYS

ADJACENT TO INTEGRAL CURB OR COMBINATION CURB AND GUTTER

DATED

STATE OF LOUISIANA
DEPARTMENT OF TRANSPORTATION AND DEVELOPMENT

DESIGNED	DETAILED	DR.	
CHECKED	CHECKED S. MCCAIN	FILE	DU-01.DGN
APPROVED Original Signed by Chief Engineer		DATE	

CHIEF ENGINEER