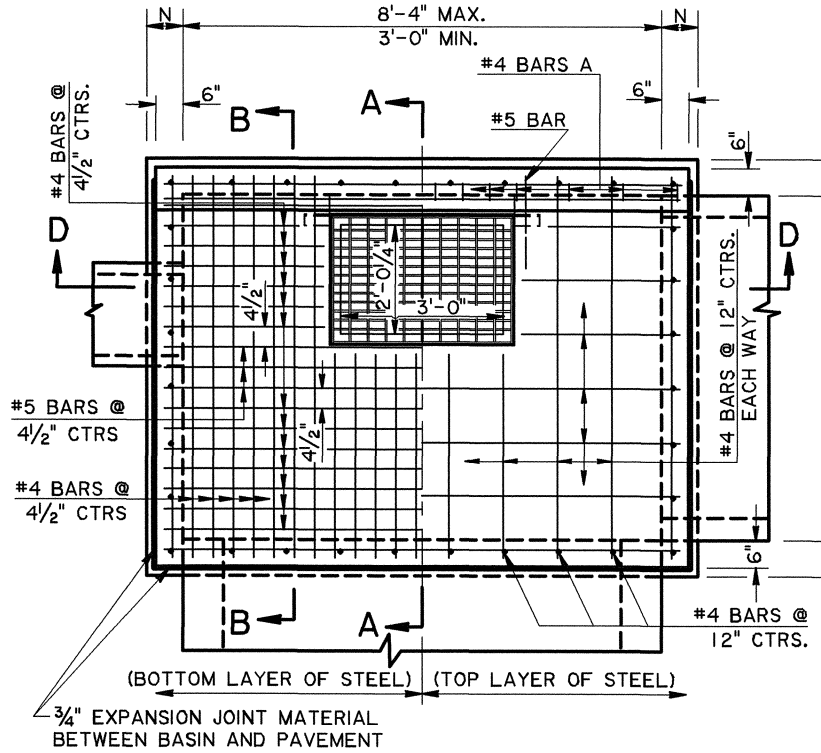

TOP SLAB PLAN

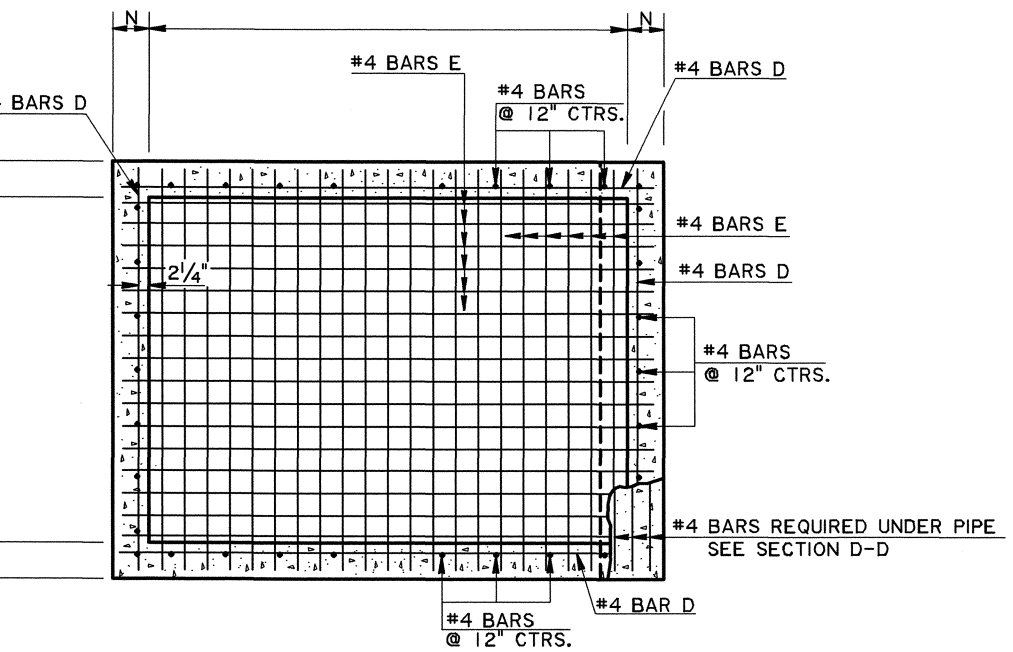

SECTIONAL PLAN

(SHOWING REINFORCING IN BOTTOM SLAB AND WALLS)

GENERAL NOTES:

1. CATCH BASIN IS DESIGNED ACCORDING TO CURRENT AASHTO PROCEDURES. SECTION 702 OF THE DOTD STANDARD SPECIFICATIONS SHALL APPLY.
2. CONCRETE: ALL CONCRETE SHALL BE CLASS "M" MINOR STRUCTURE. ALL EXPOSED EDGES SHALL BE CHAMFERED ¾ IN. EXCEPT AS NOTED.
3. REINFORCING STEEL: REINFORCING STEEL SHALL BE GRADE 60. DIMENSIONS ARE TO BAR CENTERS. MINIMUM COVER FOR REINFORCING BARS SHALL BE 2 IN. CLEAR UNLESS SHOWN OTHERWISE.
4. AS DEPTH INCREASES THE WALL AND SLAB THICKNESSES AND REINFORCEMENT SHOULD BE INCREASED AS SHOWN IN THE TABLE BELOW. THE CONTRACTOR HAS THE OPTION TO PROVIDE THE MAXIMUM REQUIRED WALL THICKNESS FOR THE FULL DEPTH OF THE STRUCTURE.

DEPTH RANGE	WALLS			BOTTOM SLAB		
	N	D BARS		T	E BARS	
	IN.	SIZE	SPAC.,IN.	IN.	SIZE	SPAC.,IN.
0' TO 9'	6.0	4	6.5	6.0	4	7.0
9'-1" TO 12'	6.5	4	5.5	6.5	4	6.0
12'-1" TO 16'	7.0	4	4.5	7.0	4	5.0
16'-1" TO 20'	7.5	4	4.0	7.5	4	4.5

5. FOR DETAILS OF METAL GRATE AND GRATE SEAT, SEE STD. PLAN MC-01, TYPE C & TYPE F.
6. THE CONTRACTOR WILL NOT POUR ABOVE THE BOTTOM OF THE SLAB UNTIL THE PAVING ADJACENT TO THE CATCH BASIN HAS BEEN COMPLETED.

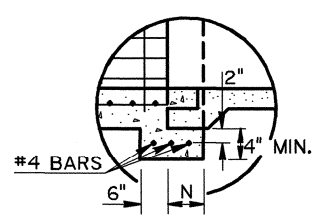

INSET "A"

RCP WITH BELLJOINT

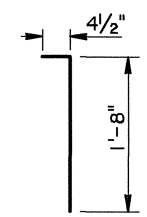

#4 BARS A

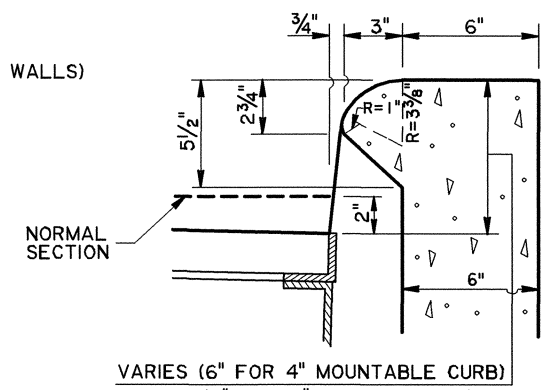

DETAIL OF OPENING IN CURB

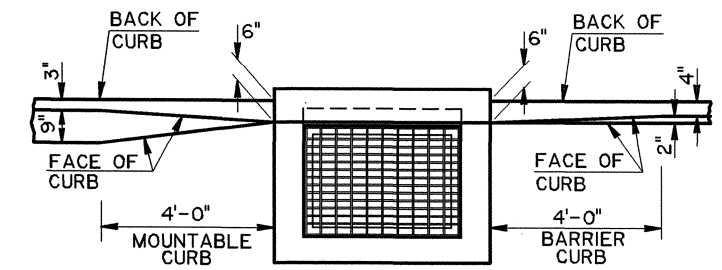

TRANSITION IN CURB WIDTH

(TYPICAL)

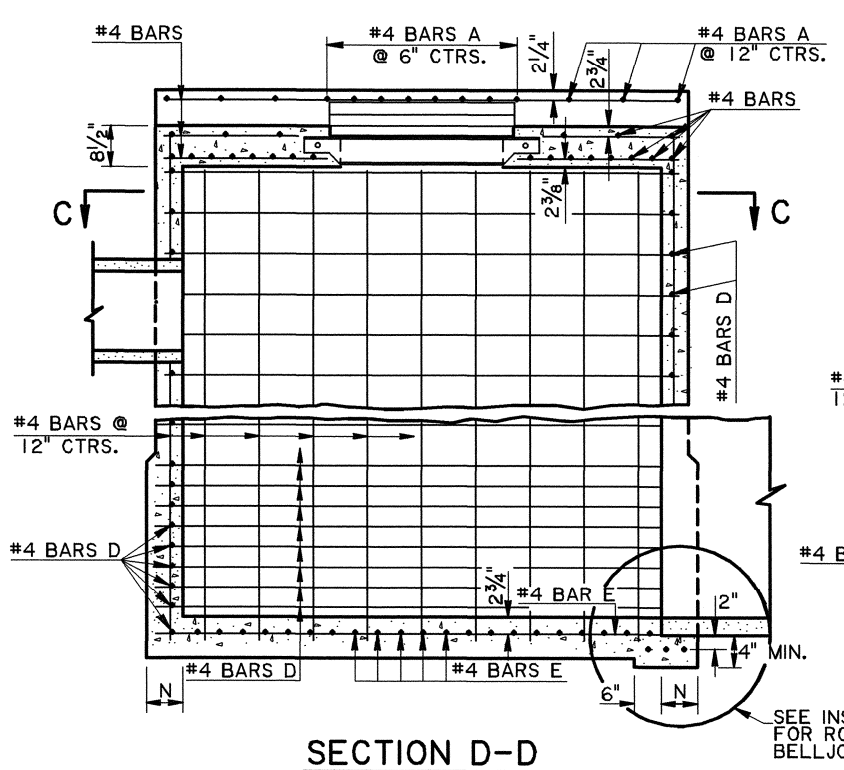

SECTION D-D

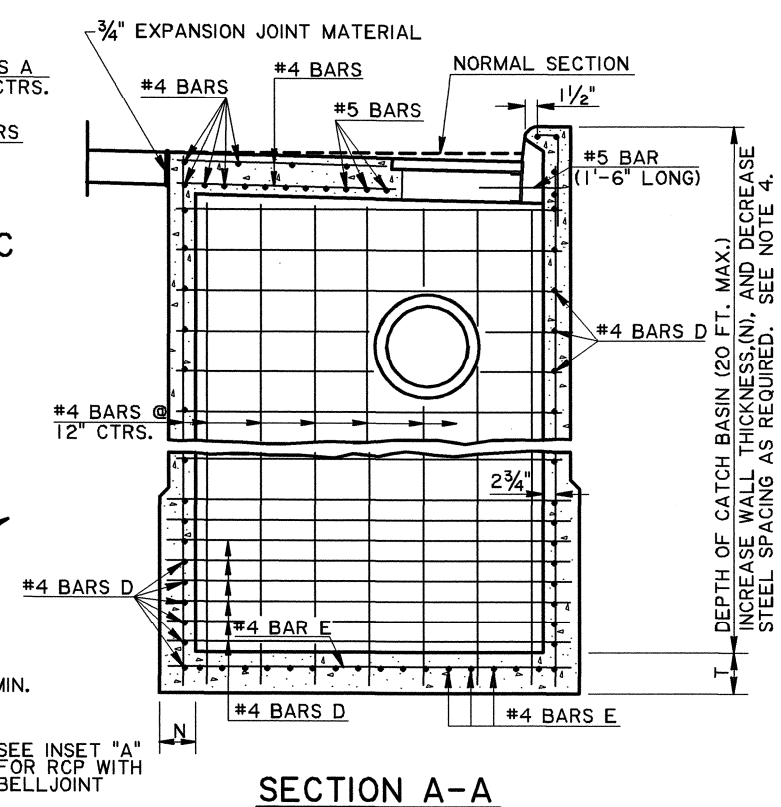

SECTION A-A

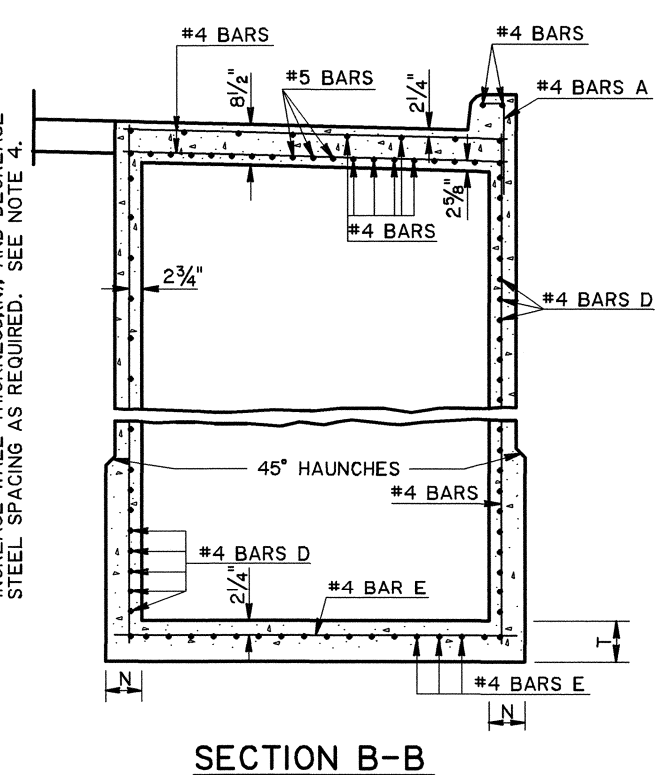

SECTION B-B

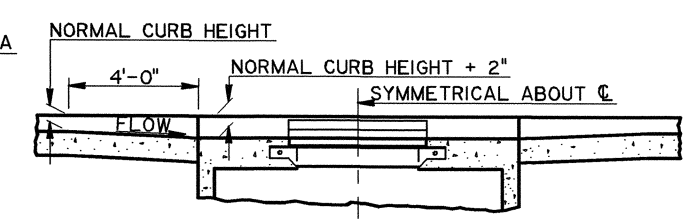

TRANSITION IN CURB HEIGHT CATCH BASIN AT LOW POINT

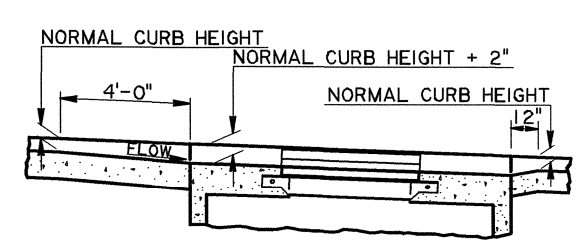

TRANSITION IN CURB HEIGHT CATCH BASIN ON A GRADE

SHEET NUMBER			
PARISH	FEDERAL PROJECT	STATE PROJECT	
DESIGNED PAA / CHECKED	DETAILED KAJ / CHECKED WMR	DATE 8-22-97 / SHEET 1 OF 1	
	JCM BY		
11-2-00 DATE	Converted Metric CB-09 to English CB-09 REVISION DESCRIPTION		
APPROVED BY CHIEF ENGINEER:	Original Signed by Chief Engineer DATE:		

COMBINATION TYPE CATCH BASIN (TRUNKLINE UNDER PAVEMENT)
4' Mountable Or 6" Barrier Curb
Max. Pipe: 84"x 84" RCP, Max. Depth: 20'

STANDARD PLAN CB-09

HYDRAULICS SECTION