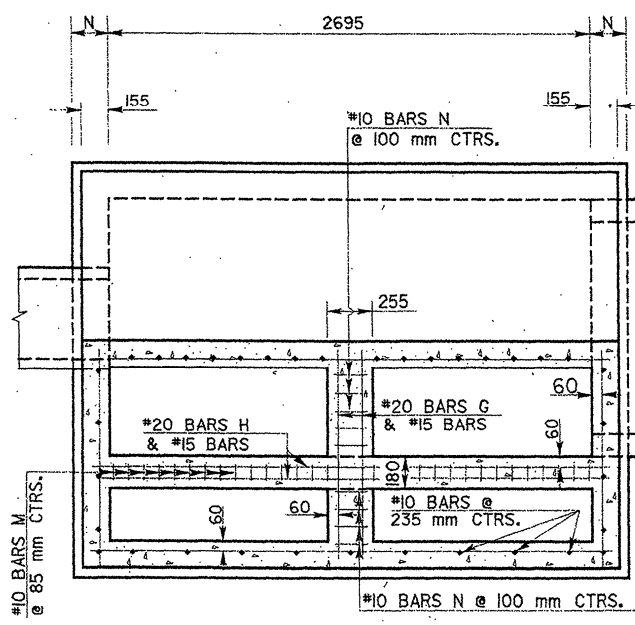

SECTION C-C

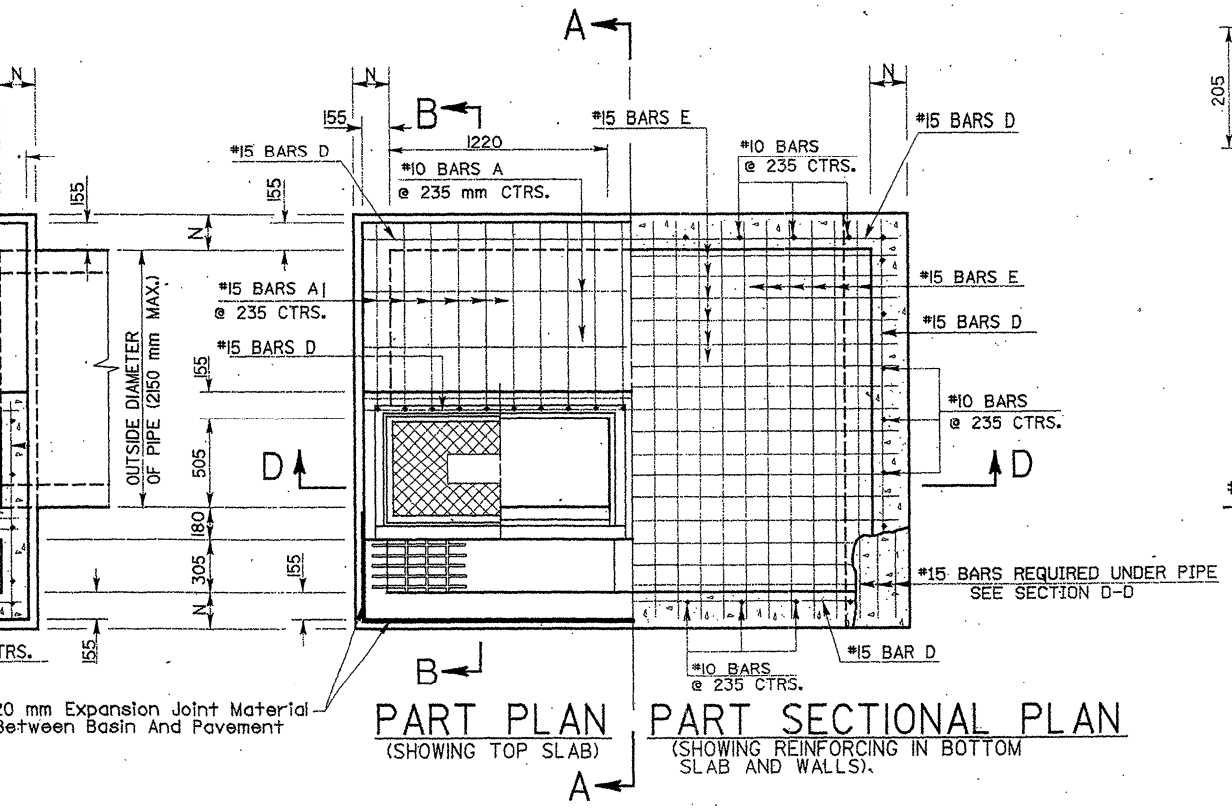

PART PLAN
(SHOWING TOP SLAB)

PART SECTIONAL PLAN
(SHOWING REINFORCING IN BOTTOM SLAB AND WALLS)

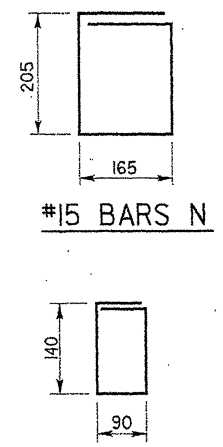

#15 BARS N

#10 BARS M

GENERAL NOTES:

1. CATCH BASIN IS DESIGNED ACCORDING TO CURRENT AASHTO PROCEDURES. SECTION 702 OF THE DOTD STANDARD SPECIFICATIONS SHALL APPLY.
2. CONCRETE: ALL CONCRETE SHALL BE CLASS "M" MINOR STRUCTURE. ALL EXPOSED EDGES SHALL BE CHAMFERED 20 mm EXCEPT AS NOTED.
3. REINFORCING STEEL: REINFORCING STEEL SHALL BE GRADE 400. DIMENSIONS ARE TO BAR CENTERS. MINIMUM COVER FOR REINFORCING BARS SHALL BE 50 mm CLEAR UNLESS SHOWN OTHERWISE.
4. AS DEPTH INCREASES THE WALL AND SLAB THICKNESSES AND REINFORCEMENT SHOULD BE INCREASED AS SHOWN IN THE TABLE BELOW. THE CONTRACTOR HAS THE OPTION TO PROVIDE THE MAXIMUM REQUIRED WALL THICKNESS FOR THE FULL DEPTH OF THE STRUCTURE.

DEPTH RANGE (m)	WALLS			BOTTOM SLAB		
	N	D BARS		T	E BARS	
	mm	SIZE	SPAC.(mm)	mm	SIZE	SPAC.(mm)
0 TO 2.0	155	15	235	155	15	295
2.1 TO 3.3	180	15	195	170	15	215
3.4 TO 5.4	205	15	155	195	15	175
5.5 TO 6.1	220	15	155	205	15	155

5. ALL DIMENSIONS ARE IN mm UNLESS OTHERWISE NOTED.
6. FOR DETAILS OF METAL COVER, FRAME, AND GRATE, SEE STD. PLAN MC-01M, TYPE H & TYPE I.
7. THE CONTRACTOR WILL NOT POUR ABOVE THE BOTTOM OF THE SLAB UNTIL THE PAVING ADJACENT TO THE CATCH BASIN HAS BEEN COMPLETED.

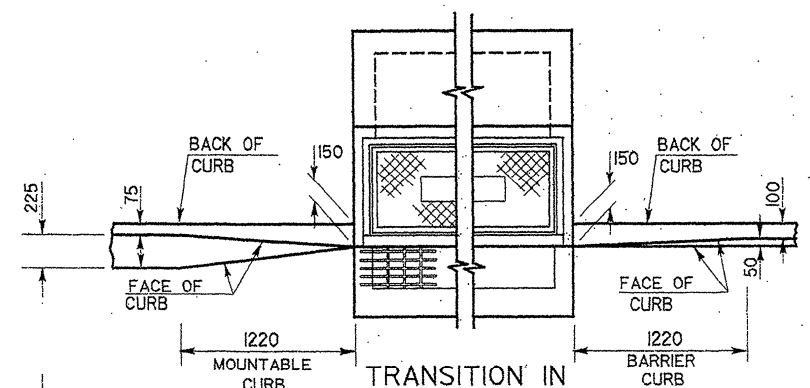

TRANSITION IN CURB WIDTH
(TYPICAL)

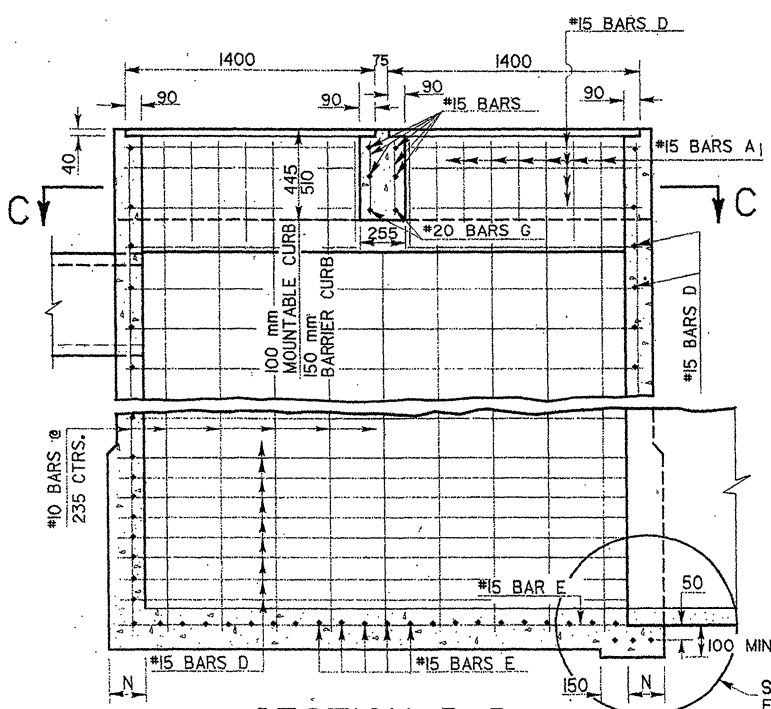

SECTION D-D

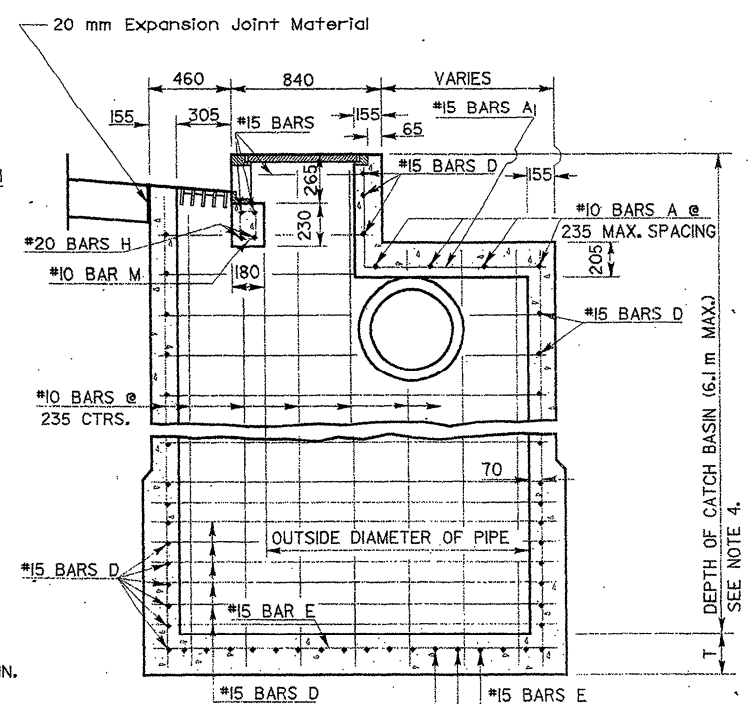

SECTION B-B

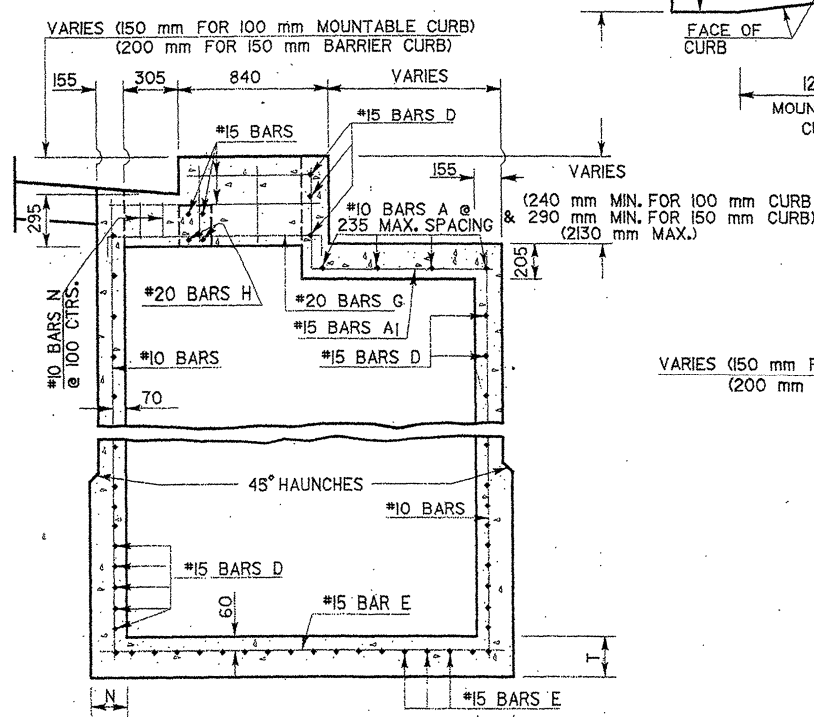

SECTION A-A

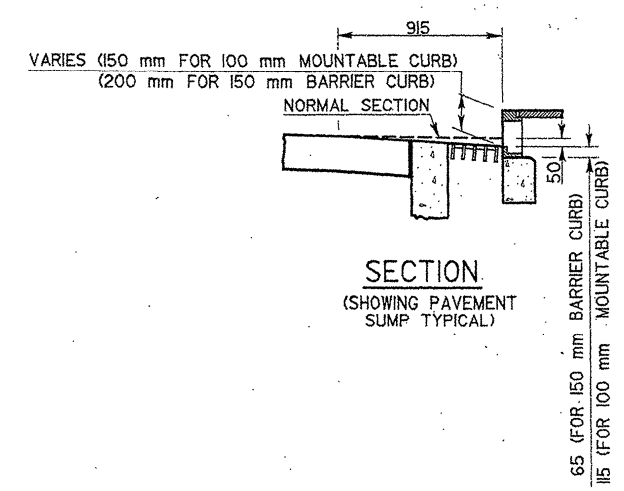

SECTION
(SHOWING PAVEMENT SUMP TYPICAL)

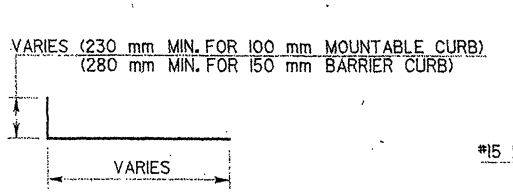

#15 BARS A1

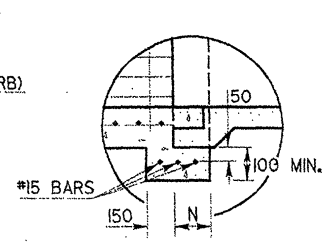

INSET "A"
RCP WITH BELLJOINT

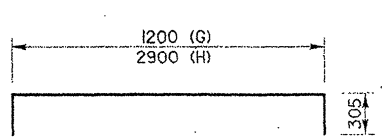

#20 BARS G & H

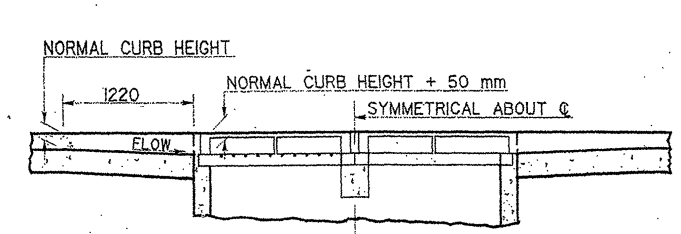

TRANSITION IN CURB HEIGHT
CATCH BASIN AT LOW POINT

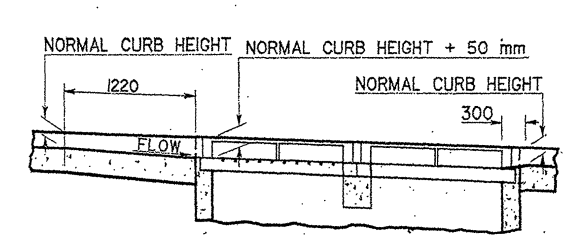

TRANSITION IN CURB HEIGHT
CATCH BASIN ON A GRADE

SHEET NUMBER

PARISH | FEDERAL PROJECT | STATE PROJECT

STATE OF LOUISIANA

CONCRETE CATCH BASIN
DOUBLE COMBINATION TYPE
100 mm Mountable Or 150 mm Barrier Curb
Max. Pipes: 1800 mm X 2100 mm, Max. Depth: 6.1 m

STANDARD PLAN | CB-08M

DOTD

HYDRAULICS SECTION

DESIGNED P.A.A.
CHECKED
DETAILED K.A.J.
CHECKED W.M.R.
DATE 7-16-97
SHEET 1 OF 1

REVISION DESCRIPTION | BY | APPROVED | DATE:

DATE:
APPROVED BY
CHIEF ENGINEER: Original Signed by Chief Engineer

15-MAY-1998 14:33

R:\dgn\metric\stdplans\cbasin\cb08m.dgn