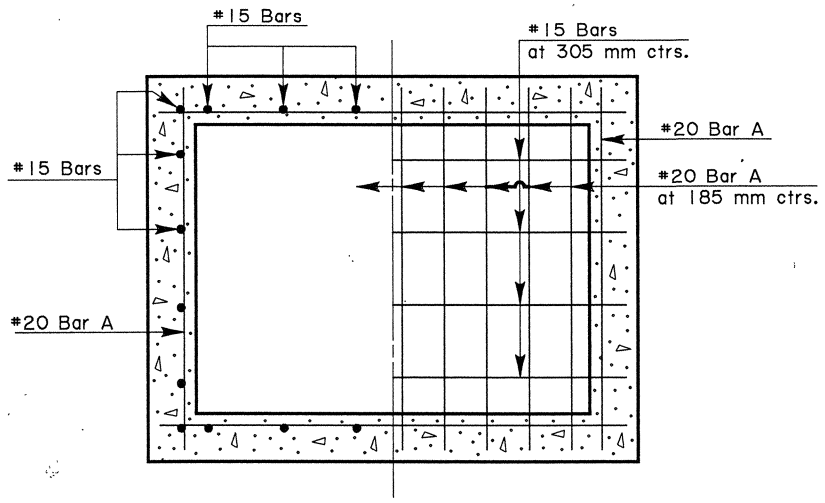

SECTIONAL PLAN

(Showing bottom slab & walls)

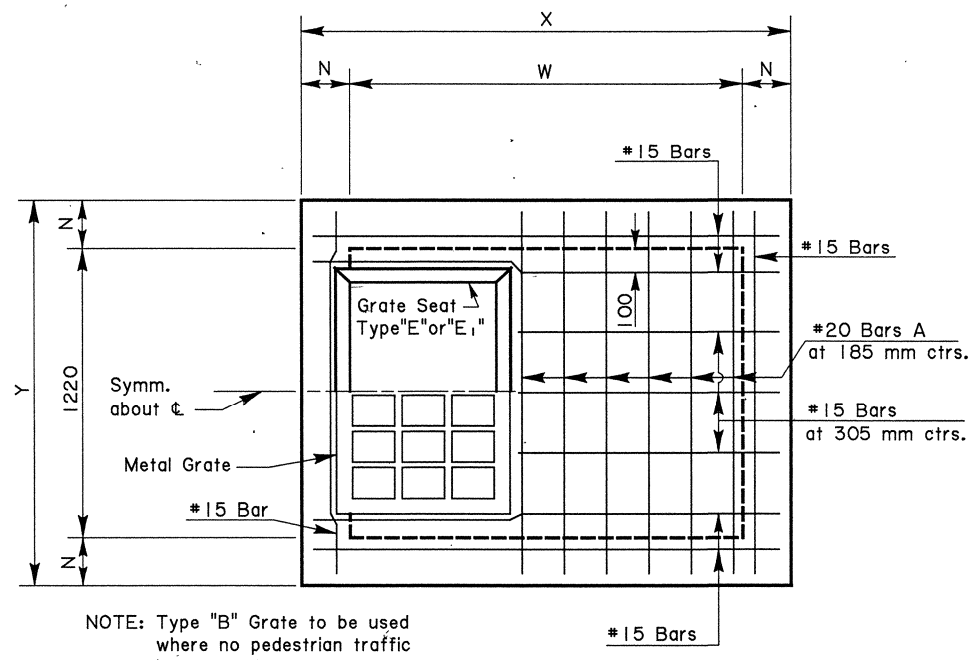

NOTE: Type "B" Grate to be used where no pedestrian traffic is expected.

Type "C" Grate to be used where pedestrian traffic is expected.

PLAN

Grate to be type "B" or "C".
Type "B" shown.

DIMENSIONS										
Trunk Pipe	Depth to 2.4 m					Depth 2.4 m to 3.7 m				
	N	T	W	X	Y	N	T	W	X	Y
mm	mm	mm	mm	mm	mm	mm	mm	mm	mm	mm
1050	180	230	1276	1636	1580	205	230	1276	1686	1630
1200	180	230	1450	1810	1580	205	230	1450	1860	1630
1350	180	230	1626	1986	1580	205	230	1626	2036	1630
1500	180	255	1800	2160	1580	205	255	1800	2210	1630
1650	180	255	1976	2336	1580	205	255	1976	2386	1630
1800	180	255	2150	2510	1580	205	255	2150	2560	1630

NOTE: X and W dimensions may be varied for skewed pipe, but W shall not exceed 2185 mm.

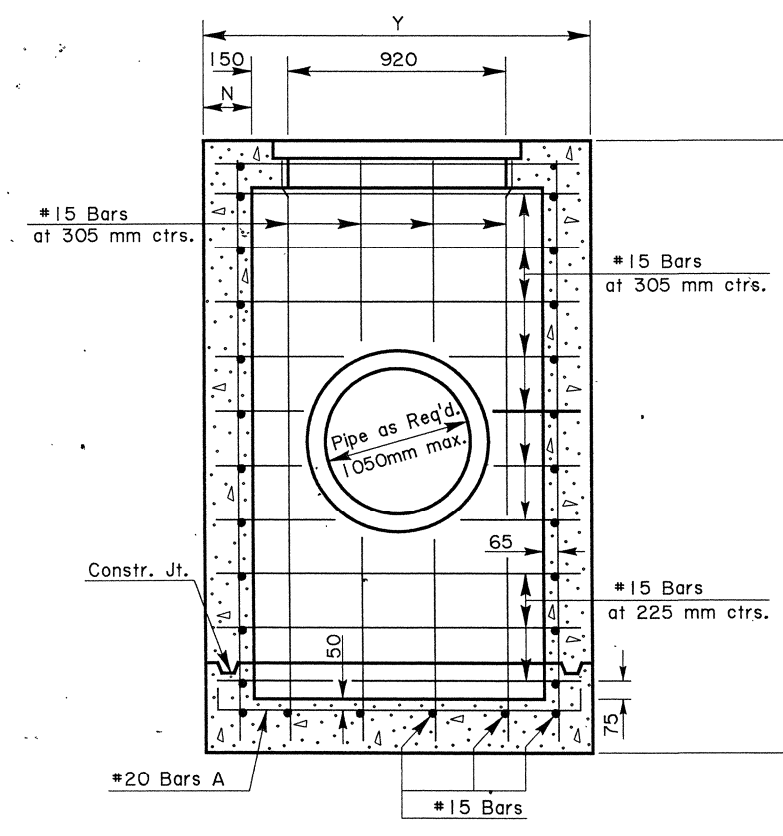

SECTION A-A

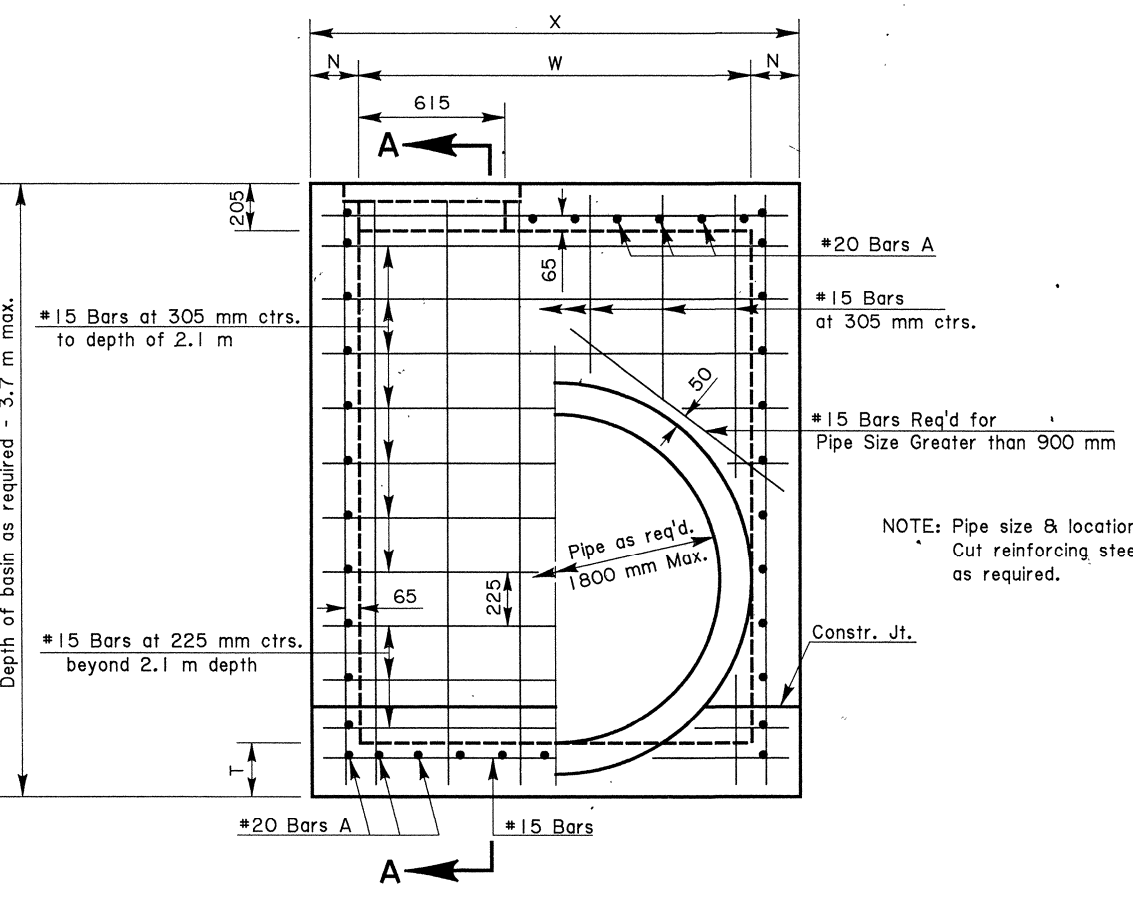

NOTE: Pipe size & location varies. Cut reinforcing steel to clear, as required.

ELEVATION

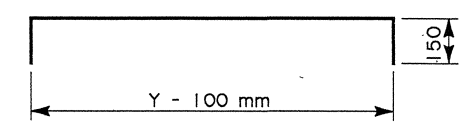

#20 BARS A

(120 mm Diam. Pin)

GENERAL NOTES:

Section 702 of the current DOTD Standard Specifications shall apply.

Dimensions relating to reinforcing steel are to bar centers.

Vertical reinforcing steel may be spliced. Splice length is 35 diameters.

For Details Of Construction Joint, See Standard Plan CM-49M.

For details of grate and seat, see Std. Plan MC-01M (Type B or C).

See plans for type of grate to be used for each Catch Basin.

NOTE: ALL DIMENSIONS ARE IN MILLIMETERS UNLESS OTHERWISE NOTED.

SHEET NUMBER

PARISH | FEDERAL PROJECT | STATE PROJECT

STATE OF LOUISIANA DEPARTMENT OF TRANSPORTATION AND DEVELOPMENT

CONCRETE OPEN TOP CATCH BASIN
Max.Pipe:1800 mm X 1050 mm, Max.Depth:3.7 m
To be used in conjunction with Std. Plan MC-01M

STANDARD PLAN CB-02M

HYDRAULICS SECTION

DESIGNED PAA	DETAILED KAJ	DATE 1-31-97
CHECKED	CHECKED WMR	SHEET 1 OF 1

DATE	REVISION DESCRIPTION	BY	APPROVED
			DATE:

APPROVED BY CHIEF ENGINEER: Original Signed by Chief Engineer

12-JAN-1998 14:12

r:\dgn\metric\stdplans\cbasin\cb02m.dgn